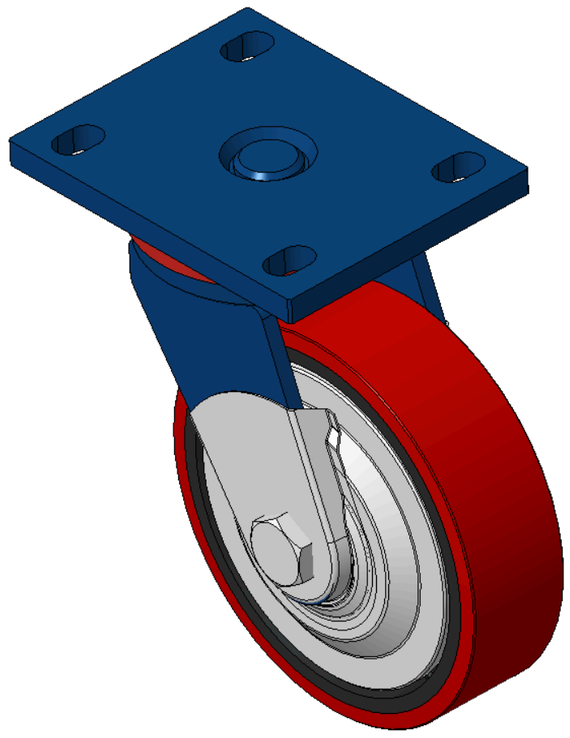

Picture may differ from original product


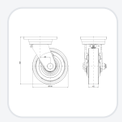
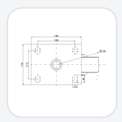

1102 B Type Caster Series

PU (Red Flat) Wheel Diameter × Wheel Width 150 × 42 mm

KS-11020600332081 Copy model no.

Wheel Diameter	Load Capacity (Dynamic)	Overall Height	Wheel Bearing
150mm	400kgs	197mm	Wheels With Ball Bearings

- Modible Casters, Welded Caster Fork
- Blue painted finish, Mounting Type - Top Plate, 105x77.5mm Bolt Hole Spacing
- Cast Iron Wheel Center, High Quality Polyurethane Wheel Tread, Cast Iron red
- Bearings—Ball Bearings, equipped with a special anti-winding cover
- Wheel Tread: Hhigh-Quality Polyurethane
- Wheel Center: iron core/cast iron

Product descriptions are for reference only. The actual product shall prevail.

Product Data Sheet | 3D Drawing Request

3D drawings are for members only. Please log in to download.

Product Data Sheet

Metric | Imperial

Wheel Diameter	150mm	Wheel Width	40mm
Wheel Bearing	Wheels With Ball Bearings	Plate Size	140 x 110mm
Bolt Hole Spacing	105 x 77.5mm	Plate Hole	20 x 13mm
Offset	42mm	Swivel Interference	238mm
Overall Height	197mm	Swivel Radius	119mm
Hardness Of Tread	92±5° Shore A	Load Capacity (Dynamic)	400kgs
Load Capacity (Static)	600kgs	Temperature	-20°C to +70°C
Fork Type	Swivel Caster	Stainless	N/A
Electrical Conductivity	N/A	Anti-Static	N/A
Weight	3.58kgs	Standard	ISO22883

* For any deviation between metric and imperial spec, please refer to the metric spec.

Performance

Rolling Smoothness
Max. 5 points Score: 3

Quiet Operation
Max. 5 points Score: 4

Floor Surface Preservation
Max. 5 points Score: 4

Downloads

PDF **1102-EN-KS2026112017.pdf**
Product Data Sheet

3D **1102-CN-KS2026112017-d261120145422.rar**
3D drawings are for members only. Please log in to download.

Related Products

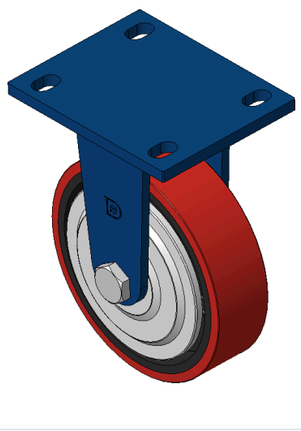

1102 B Type Caster Series
PU (Red Flat) Wheel Diameter × Wheel Width 150 × 42 mm
KS-11020600331041

wheel diameter	dynamic load	overall height
150 mm	400 kg	197 mm

View specs →

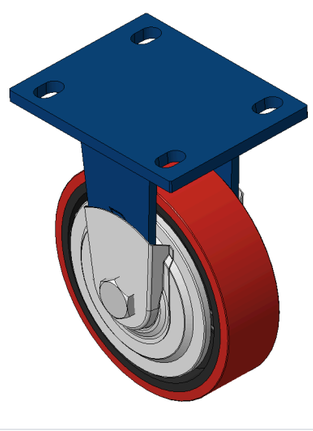

1102 B Type Caster Series
PU (Red Flat) Wheel Diameter × Wheel Width 150 × 42 mm
KS-11020600331081

wheel diameter	dynamic load	overall height
150 mm	400 kg	197 mm

View specs →

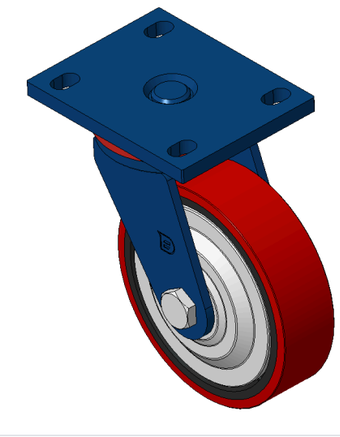

1102 B Type Caster Series
PU (Red Flat) Wheel Diameter × Wheel Width 150 × 42 mm
KS-11020600332041

wheel diameter	dynamic load	overall height
150 mm	400 kg	197 mm

View specs →