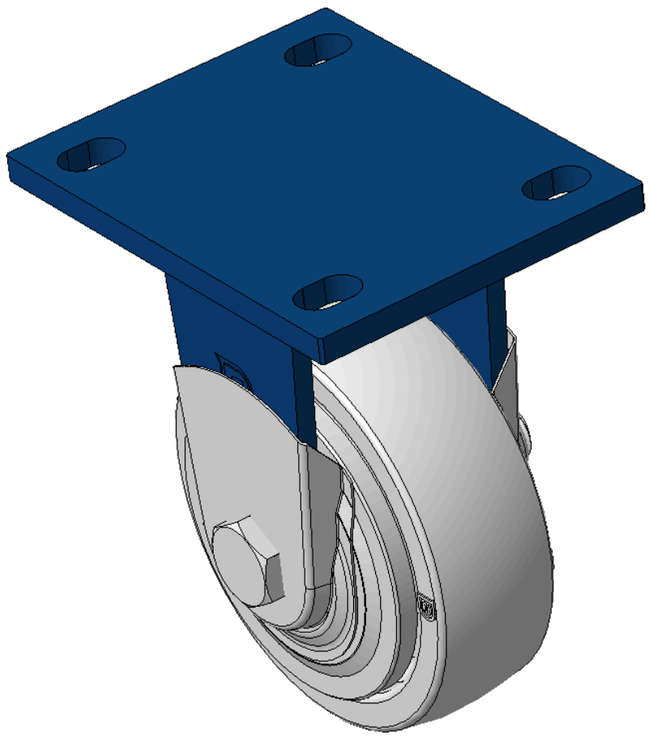

Picture may differ from original product



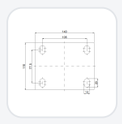

1102 B Type Caster Series

MRC (Transparent) Wheel Diameter × Wheel Width 125 x 40mm

KS-11020500071071 Copy model no.

Wheel Diameter	Load Capacity (Dynamic)	Overall Height	Wheel Bearing
125mm	300kgs	170mm	Wheels With Ball Bearings

- Rigid Casters, Welded Caster Fork
- Blue painted finish, Mounting Type - Top Plate, 105x77.5mm Bolt Hole Spacing
- Cast Iron Wheel Center, High-Quality, high-elasticity rubber Wheel Tread, Cast Iron to original color
- Bearings—Ball Bearings, equipped with a special anti-winding wheel cover
- Wheel surface: Made of high-quality, high-elasticity rubber
- Wheel Center: Iron core / Cast iron core

Product descriptions are for reference only. The actual product shall prevail.

Product Data Sheet (Metric) | 3D Drawing Request

3D drawings are for members only. Please log in to download.

Product Data Sheet

Metric | Imperial

Wheel Diameter	125mm	Wheel Width	40mm
Wheel Bearing	Wheels With Ball Bearings	Plate Size	140 x 110mm
Bolt Hole Spacing	105 x 77.5mm	Plate Hole	20 x 13mm
Overall Height	170mm	Hardness Of Tread	75±5° Shore D
Load Capacity (Dynamic)	300kgs	Load Capacity (Static)	300kgs
Temperature	-20°C to +80°C	Fork Type	Rigid Caster
Stainless	N/A	Electrical Conductivity	N/A
Anti-Static	N/A	Weight	2.25kgs
Standard	ISO22883		

* For any deviation between metric and imperial spec, please refer to the metric spec.

Performance

Rolling Smoothness
Max. 5 points Score: 5

Quiet Operation
Max. 5 points Score: 2

Floor Surface Preservation
Max. 5 points Score: 2

Downloads

PDF **1102-EN-KS2026112305.pdf**
Product Data Sheet (Metric)

3D **1102-CN-KS2026112305-d261123103230.rar**
3D drawings are for members only. Please log in to download.

Related Products

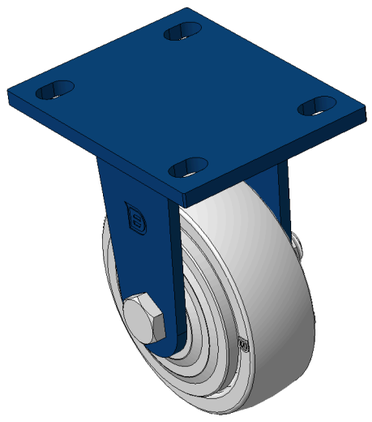

1102 B Type Caster Series

MRC (Transparent) Wheel Diameter × Wheel Width 125 x 40mm

KS-11020500071061

wheel diameter	dynamic load	overall height
125 mm	300 kg	170 mm

View specs →