Choose another country or region to see content specific to your location.
United States & Other Regions
Continue

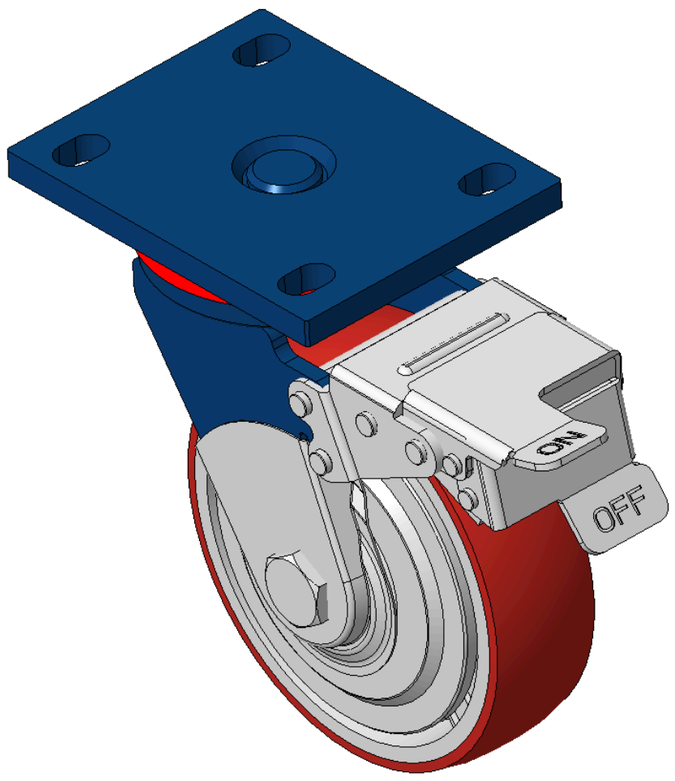

Picture may differ from original product



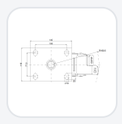

1102 B Type Caster Series

PU (red round) Wheel Diameter x Wheel Width 150x 42mm

KS-11020600334151 Copy model no.

Wheel Diameter	Load Capacity per Wheel (Dynamic)	Overall Height	Wheel Bearing
150mm	335kgs	197mm	Wheels With Ball Bearings

- Equipped with front brake, With locking system Casters, Welded Caster Fork
- Blue painted finish, Mounting Type - Top Plate Bolt Hole Spacing—105x77.5
- Cast Iron Wheel Center, High Quality Polyurethane Wheel Tread
- Ball Bearing bearings, with specially designed anti-winding wheel caps
- Wheel Tread: Hhigh-Quality Polyurethane
- Wheel Center: Iron core / Cast iron core

Product descriptions are for reference only. The actual product shall prevail.

3D Drawing Request

3D drawings are for members only. Please log in to download.

Product Data Sheet

Metric | Imperial

Wheel Diameter	**150mm**	Wheel Width	**42mm**
Wheel Bearing	**Wheels With Ball Bearings**	Plate Size	**140 x 110mm**
Bolt Hole Spacing	**105 x 77.5mm**	Plate Hole	**20 x 13mm**
Offset	**42mm**	Swivel Interference	**321mm**
Overall Height	**197mm**	Swivel Radius	**160.5mm**
Hardness Of Tread	**92±5° Shore A**	Load Capacity per Wheel (Dynamic)	**335kgs**
Load Capacity per Wheel (Static)	**502.5kgs**	Temperature	**-20°C to +70°C**
Fork Type	**Swivel Caster With Front Brake**	Stainless	**N/A**
Electrical Conductivity	**N/A**	Anti-Static	**N/A**
Weight	**3.17kgs**	Standard	**ISO22883**

* For any deviation between metric and imperial spec, please refer to the metric spec.

Performance

Rolling Smoothness
Max. 5 points Score: 3

Quiet Operation
Max. 5 points Score: 4

Floor Surface Preservation
Max. 5 points Score: 4

Downloads

3D **1102-CN-KS2026112509-d261125155231.rar**
3D drawings are for members only. Please log in to download. ›

Related Products

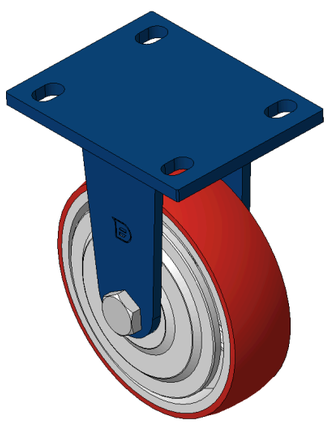

1102 B Type Caster Series
PU (red round) Wheel Diameter x Wheel Width 150x 42mm
KS-11020600331181

wheel diameter	dynamic load	overall height
150 mm	400 kg	197 mm

View specs →

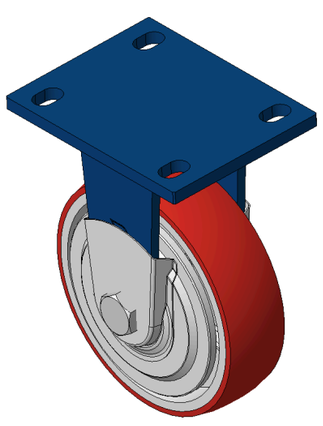

1102 B Type Caster Series
PU (red round) Wheel Diameter x Wheel Width 150x 42mm
KS-11020600331211

wheel diameter	dynamic load	overall height
150 mm	400 kg	197 mm

View specs →

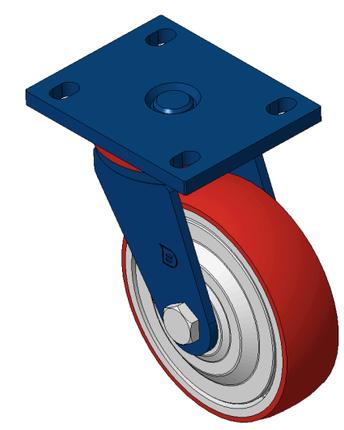

1102 B Type Caster Series
PU (red round) Wheel Diameter x Wheel Width 150x 42mm
KS-11020600332161

wheel diameter	dynamic load	overall height
150 mm	400 kg	197 mm

View specs →

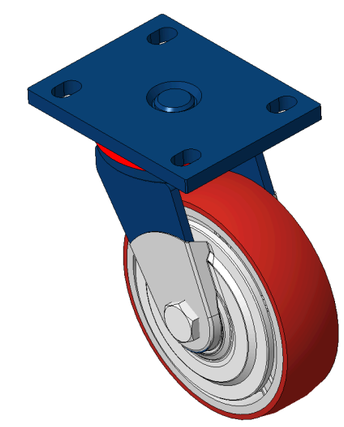

1102 B Type Caster Series
PU (red round) Wheel Diameter x Wheel Width 150x 42mm
KS-11020600332171

wheel diameter	dynamic load	overall height
150 mm	335 kg	197 mm

View specs →