Choose another country or region to see content specific to your location.
United States & Other Regions
Continue



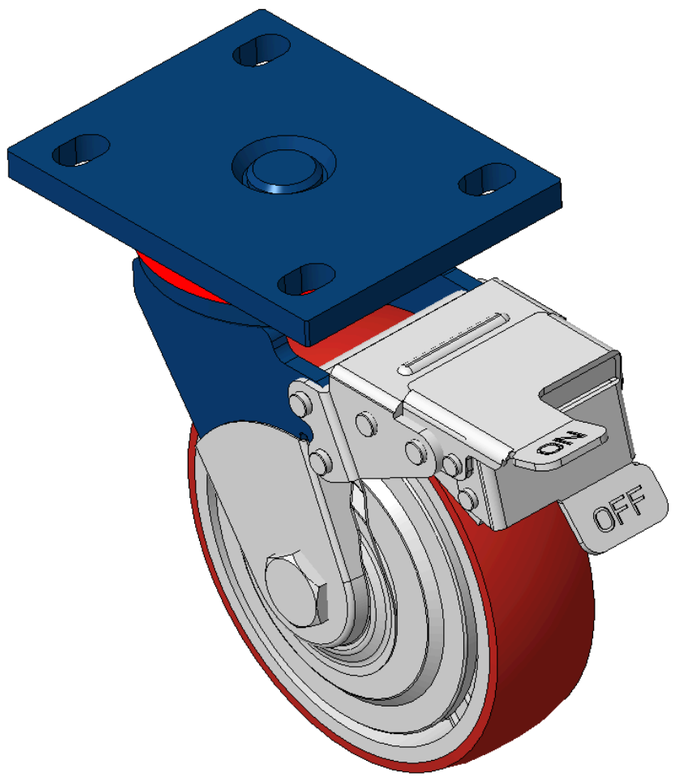


Picture may differ from original product



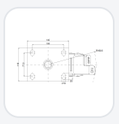

1102 B Type Caster Series

# PU (red round) Wheel Diameter x Wheel Width 150x 42mm

KS-11020600334151 Copy model no.

| Wheel Diameter | Load Capacity per Wheel (Dynamic) | Overall Height | Wheel Bearing |
|---|---|---|---|
| 150mm | 335kgs | 197mm | Wheels With Ball Bearings |

- Equipped with front brake, With locking system Casters, Welded Caster Fork
- Blue painted finish, Mounting Type - Top Plate Bolt Hole Spacing—105x77.5
- Cast Iron Wheel Center, High Quality Polyurethane Wheel Tread
- Ball Bearing bearings, with specially designed anti-winding wheel caps
- Wheel Tread: Hhigh-Quality Polyurethane
- Wheel Center: Iron core / Cast iron core

Product descriptions are for reference only. The actual product shall prevail.

Product Data Sheet
3D Drawing Request

3D drawings are for members only. Please log in to download.

## Product Data Sheet

Metric | Imperial

| | | | |
|---|---|---|---|
| Wheel Diameter | 150mm | Wheel Width | 42mm |
| Wheel Bearing | Wheels With Ball Bearings | Plate Size | 140 x 110mm |
| Bolt Hole Spacing | 105 x 77.5mm | Plate Hole | 20 x 13mm |
| Offset | 42mm | Swivel Interference | 321mm |
| Overall Height | 197mm | Swivel Radius | 160.5mm |
| Hardness Of Tread | 92±5° Shore A | Load Capacity per Wheel (Dynamic) | 335kgs |
| Load Capacity per Wheel (Static) | 502.5kgs | Temperature | -20°C to +70°C |
| Fork Type | Swivel Caster With Front Brake | Stainless | N/A |
| Electrical Conductivity | N/A | Anti-Static | N/A |
| Weight | 3.17kgs | Standard | ISO22883 |

* For any deviation between metric and imperial spec, please refer to the metric spec.

## Performance

**Rolling Smoothness**
Max. 5 points Score: 3

**Quiet Operation**
Max. 5 points Score: 4

**Floor Surface Preservation**
Max. 5 points Score: 4

## Downloads

PDF **1102-EN-KS2026112509.pdf**
Product Data Sheet

3D **1102-CN-KS2026112509-d261125155231.rar**
3D drawings are for members only. Please log in to download.

## Related Products

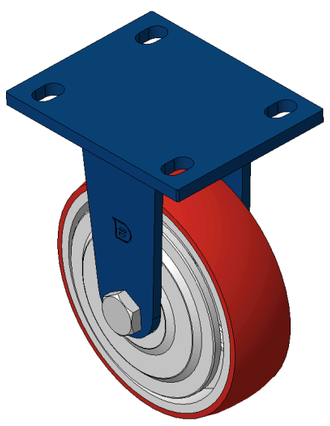

1102 B Type Caster Series
**PU (red round) Wheel Diameter x Wheel Width 150x 42mm**
KS-11020600331181

| wheel diameter | dynamic load | overall height |
|---|---|---|
| 150 mm | 400 kg | 197 mm |

View specs →

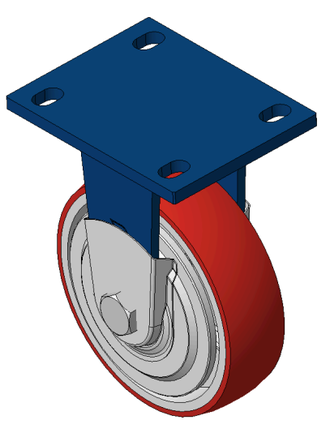

1102 B Type Caster Series
**PU (red round) Wheel Diameter x Wheel Width 150x 42mm**
KS-11020600331211

| wheel diameter | dynamic load | overall height |
|---|---|---|
| 150 mm | 400 kg | 197 mm |

View specs →

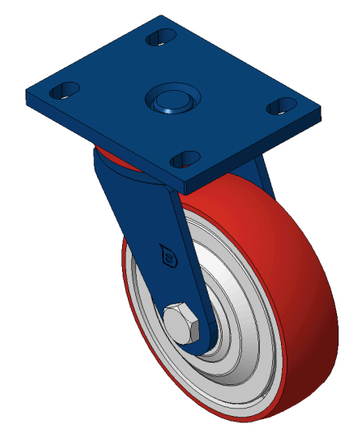

1102 B Type Caster Series
**PU (red round) Wheel Diameter x Wheel Width 150x 42mm**
KS-11020600332161

| wheel diameter | dynamic load | overall height |
|---|---|---|
| 150 mm | 400 kg | 197 mm |

View specs →

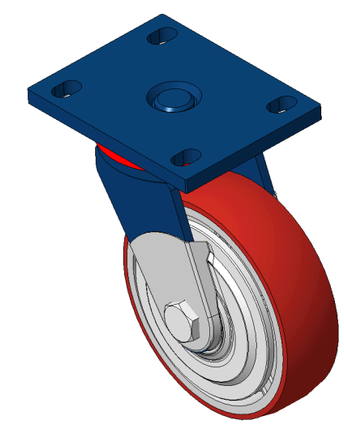

1102 B Type Caster Series
**PU (red round) Wheel Diameter x Wheel Width 150x 42mm**
KS-11020600332171

| wheel diameter | dynamic load | overall height |
|---|---|---|
| 150 mm | 335 kg | 197 mm |

View specs →