Choose another country or region to see content specific to your location.
United States & Other Regions
Continue

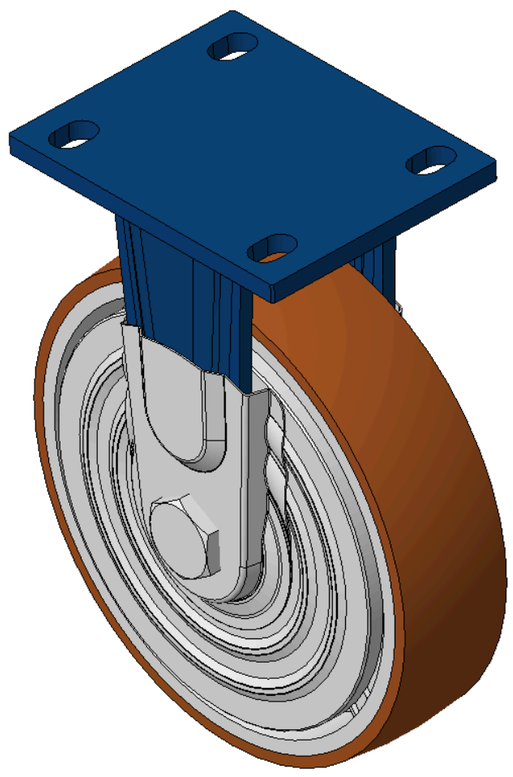

Picture may differ from original product



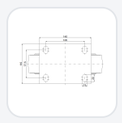

1102 B Type Caster Series

QPU (brown round) Wheel Diameter x Wheel Width 200 x 50mm

KS-11020800531171 Copy model no.

Wheel Diameter	Load Capacity per Wheel (Dynamic)	Overall Height	Wheel Bearing
200mm	450kgs	248mm	Wheels With Ball Bearings

- Rigid Casters, Welded Caster Fork
- Blue paint finish, plate Mounting Type, 105x77.5mm Bolt Hole Spacing
- Cast Iron wheel center, High-Quality, high-elasticity rubber Wheel Tread
- Ball Bearing bearings, equipped with a special anti-winding wheel cover
- Wheel Tread: Hhigh-Quality Polyurethane
- Wheel hub: Iron wheel hub

Product descriptions are for reference only. The actual product shall prevail.

3D Drawing Request

3D drawings are for members only. Please log in to download.

Product Data Sheet

Metric | Imperial

Wheel Diameter	**200mm**	Wheel Width	**50mm**
Wheel Bearing	**Wheels With Ball Bearings**	Plate Size	**140 x 110mm**
Bolt Hole Spacing	**105 x 77.5mm**	Plate Hole	**20 x 13mm**
Overall Height	**248mm**	Hardness Of Tread	**92±5° Shore A**
Load Capacity per Wheel (Dynamic)	**450kgs**	Load Capacity per Wheel (Static)	**675kgs**
Temperature	**-20°C to +70°C**	Fork Type	**Rigid Caster**
Stainless	**N/A**	Electrical Conductivity	**N/A**
Anti-Static	**N/A**	Weight	**5.34kgs**
Standard	**ISO22883**		

* For any deviation between metric and imperial spec, please refer to the metric spec.

Performance

Rolling Smoothness
Max. 5 points Score: 5

Quiet Operation
Max. 5 points Score: 5

Floor Surface Preservation
Max. 5 points Score: 5

Downloads

3D **1102-CN-KS2026112608-d261126092014.rar**
3D drawings are for members only. Please log in to download. ›

Related Products

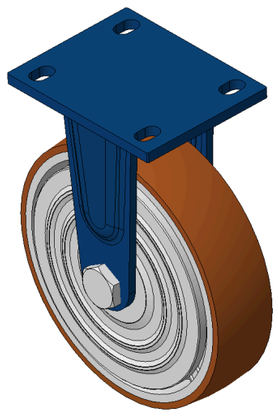

1102 B Type Caster Series

QPU (brown round) Wheel Diameter x Wheel Width 200 x 50mm

KS-11020800531131

wheel diameter	dynamic load	overall height
200 mm	450 kg	248 mm

View specs →