Choose another country or region to see content specific to your location.
United States & Other Regions
Continue

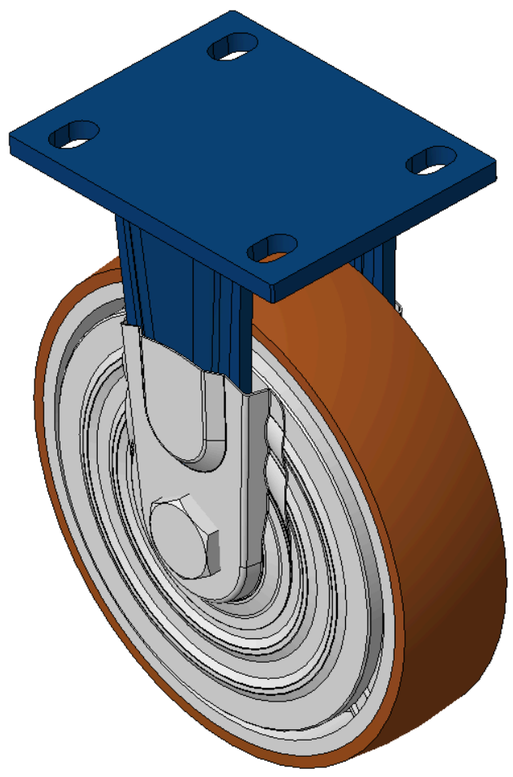

Picture may differ from original product



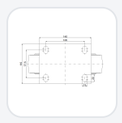

1102 B Type Caster Series

QPU (brown round) Wheel Diameter x Wheel Width 200 x 50mm

KS-11020800531171 Copy model no.

Wheel Diameter	Load Capacity per Wheel (Dynamic)	Overall Height	Wheel Bearing
200mm	450kgs	248mm	Wheels With Ball Bearings

- Rigid Casters, Welded Caster Fork
- Blue paint finish, plate Mounting Type, 105x77.5mm Bolt Hole Spacing
- Cast Iron wheel center, High-Quality, high-elasticity rubber Wheel Tread
- Ball Bearing bearings, equipped with a special anti-winding wheel cover
- Wheel Tread: Hhigh-Quality Polyurethane
- Wheel hub: Iron wheel hub

Product descriptions are for reference only. The actual product shall prevail.

Product Data Sheet | 3D Drawing Request

3D drawings are for members only. Please log in to download.

Product Data Sheet

Metric | Imperial

Wheel Diameter	**200mm**	Wheel Width	**50mm**
Wheel Bearing	**Wheels With Ball Bearings**	Plate Size	**140 x 110mm**
Bolt Hole Spacing	**105 x 77.5mm**	Plate Hole	**20 x 13mm**
Overall Height	**248mm**	Hardness Of Tread	**92±5° Shore A**
Load Capacity per Wheel (Dynamic)	**450kgs**	Load Capacity per Wheel (Static)	**675kgs**
Temperature	**-20°C to +70°C**	Fork Type	**Rigid Caster**
Stainless	**N/A**	Electrical Conductivity	**N/A**
Anti-Static	**N/A**	Weight	**5.34kgs**
Standard	**ISO22883**		

* For any deviation between metric and imperial spec, please refer to the metric spec.

Performance

Rolling Smoothness
Max. 5 points Score: 5

Quiet Operation
Max. 5 points Score: 5

Floor Surface Preservation
Max. 5 points Score: 5

Downloads

PDF **1102-EN-KS2026112608.pdf**
Product Data Sheet

3D **1102-CN-KS2026112608-d261126092014.rar**
3D drawings are for members only. Please log in to download.

Related Products

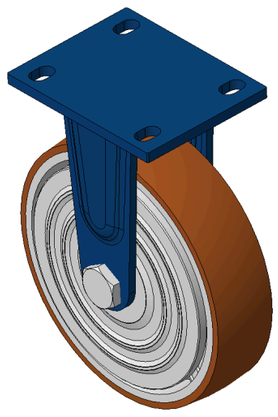

1102 B Type Caster Series

QPU (brown round) Wheel Diameter x Wheel Width 200 x 50mm

KS-11020800531131

wheel diameter	dynamic load	overall height
200 mm	450 kg	248 mm

View specs →