Choose another country or region to see content specific to your location.
United States & Other Regions
Continue

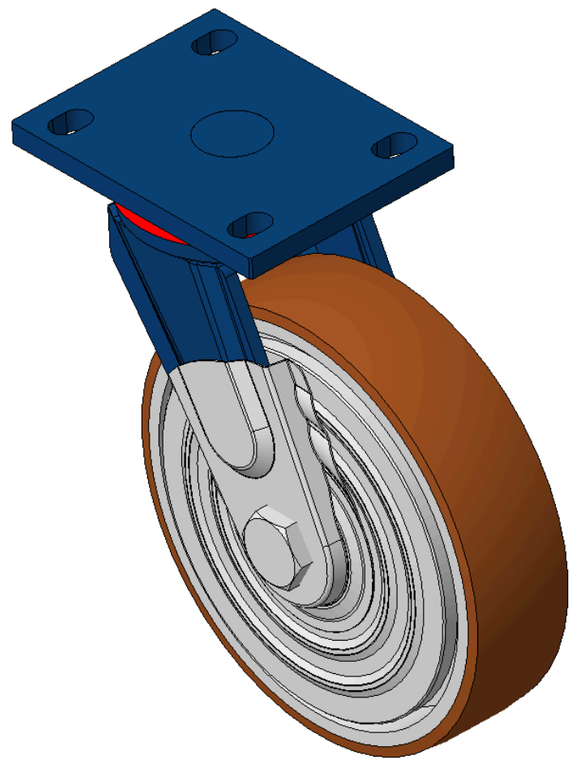

Picture may differ from original product



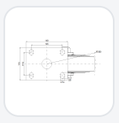

1102 B Type Caster Series

QPU (brown round) Wheel Diameter x Wheel Width 200 x 50mm

KS-11020800532171 Copy model no.

Wheel Diameter	Load Capacity per Wheel (Dynamic)	Overall Height	Wheel Bearing
200mm	450kgs	248mm	Wheels With Ball Bearings

- Modible Casters, Welded Caster Fork
- Blue painted finish, plate Mounting Type, 105x77.5mm Bolt Hole Spacing
- Cast Iron Wheel Center, High Quality Polyurethane Wheel Tread, Cast Iron brown
- Bearings—Ball Bearings, equipped with a special anti-winding wheel cover
- Wheel Tread: Hhigh-Quality Polyurethane
- Wheel Center: Iron core / Cast iron core

Product descriptions are for reference only. The actual product shall prevail.

Product Data Sheet | 3D Drawing Request

3D drawings are for members only. Please log in to download.

Product Data Sheet

Metric | Imperial

Wheel Diameter	**200mm**	Wheel Width	**50mm**
Wheel Bearing	**Wheels With Ball Bearings**	Plate Size	**140 x 110mm**
Bolt Hole Spacing	**105 x 77.5mm**	Plate Hole	**20 x 13mm**
Offset	**62mm**	Swivel Interference	**330mm**
Overall Height	**248mm**	Swivel Radius	**165mm**
Hardness Of Tread	**° Shore A**	Load Capacity per Wheel (Dynamic)	**450kgs**
Load Capacity per Wheel (Static)	**675kgs**	Temperature	
Fork Type	**Swivel Caster**	Stainless	**N/A**
Electrical Conductivity	**N/A**	Anti-Static	**N/A**
Weight	**6.4kgs**	Standard	**ISO22883**

* For any deviation between metric and imperial spec, please refer to the metric spec.

Performance

Rolling Smoothness
Max. 5 points Score: 3

Quiet Operation
Max. 5 points Score: 4

Floor Surface Preservation
Max. 5 points Score: 4

Downloads

PDF **1102-EN-KS2026112624.pdf**
Product Data Sheet

3D **1102-CN-KS2026112624-d261126142441.rar**
3D drawings are for members only. Please log in to download.

Related Products

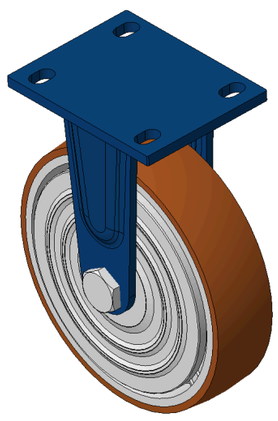

1102 B Type Caster Series
KS-11020800531131 QPU (brown round) Wheel Diameter x Wheel···

wheel diameter	dynamic load	overall height
200 mm	450 kg	248 mm

View specs →

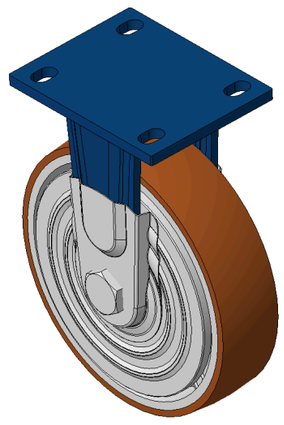

1102 B Type Caster Series
KS-11020800531171 QPU (brown round) Wheel Diameter x Wheel···

wheel diameter	dynamic load	overall height
200 mm	450 kg	248 mm

View specs →

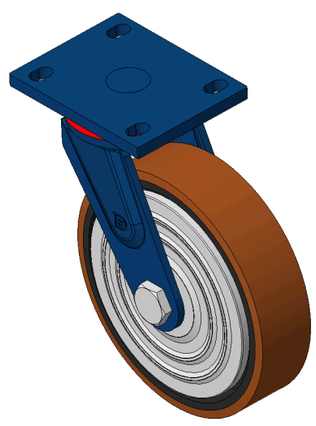

1102 B Type Caster Series
KS-11020800532131 QPU (brown round) Wheel Diameter x Wheel···

wheel diameter	dynamic load	overall height
200 mm	450 kg	248 mm

View specs →