Choose another country or region to see content specific to your location.
United States & Other Regions
Continue



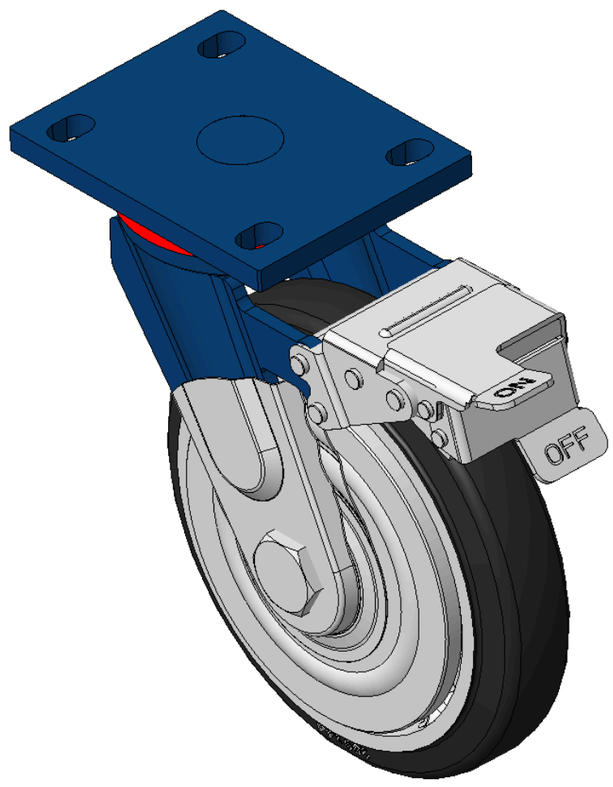


Picture may differ from original product



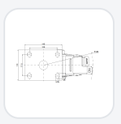

1102 B Type Caster Series

# NBR (milling black) Wheel Diameter x Wheel Width 200 x 44mm

KS-11020800044061 Copy model no.

| Wheel Diameter | Load Capacity per Wheel (Dynamic) | Overall Height | Wheel Bearing |
|---|---|---|---|
| 200mm | 350kgs | 248mm | Wheels With Ball Bearings |

- Equipped with front brake, With locking system Casters, Welded Caster Fork
- Blue painted finish, Mounting Type - Top Plate, 105x77.5mm Bolt Hole Spacing
- Cast Iron Wheel Center, High-Quality, high-elasticity rubber Wheel Tread, Cast Iron black
- Bearings—Ball Bearings, with specially designed anti-winding wheel caps
- Wheel surface: Made of high-quality, high-elasticity rubber
- Wheel Center: Iron core / Cast iron core

Product descriptions are for reference only. The actual product shall prevail.

Product Data Sheet | 3D Drawing Request

3D drawings are for members only. Please log in to download.

## Product Data Sheet

Metric | Imperial

| | | | |
|---|---|---|---|
| Wheel Diameter | 200mm | Wheel Width | 44mm |
| Wheel Bearing | Wheels With Ball Bearings | Plate Size | 140 x 110mm |
| Bolt Hole Spacing | 105 x 77.5mm | Plate Hole | 20 x 13mm |
| Offset | 62mm | Swivel Interference | 370mm |
| Overall Height | 248mm | Swivel Radius | 185mm |
| Hardness Of Tread | 85±5° Shore A | Load Capacity per Wheel (Dynamic) | 350kgs |
| Load Capacity per Wheel (Static) | 525kgs | Temperature | -20°C to +80°C |
| Fork Type | Swivel Caster With Front Brake | Stainless | N/A |
| Electrical Conductivity | N/A | Anti-Static | N/A |
| Weight | 6.60kgs | Standard | ISO22883 |

* For any deviation between metric and imperial spec, please refer to the metric spec.

## Performance

**Rolling Smoothness**
Max. 5 points Score: 3

**Quiet Operation**
Max. 5 points Score: 4

**Floor Surface Preservation**
Max. 5 points Score: 4

## Downloads

PDF **1102-EN-KS2026112626.pdf**
Product Data Sheet

3D **1102-CN-KS2026112626-d261126175246.rar**
3D drawings are for members only. Please log in to download.

## Related Products

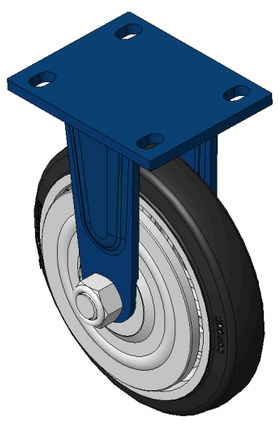

1102 B Type Caster Series
KS-11020800041111 NBR (milling black) Wheel Diameter x Wheel…

| wheel diameter | dynamic load | overall height |
|---|---|---|
| 200 mm | 450 kg | 248 mm |

View specs →

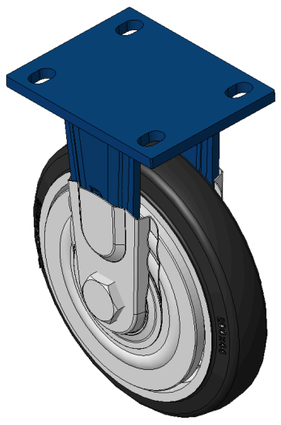

1102 B Type Caster Series
KS-11020800041121 NBR (milling black) Wheel Diameter x Wheel…

| wheel diameter | dynamic load | overall height |
|---|---|---|
| 200 mm | 450 kg | 248 mm |

View specs →

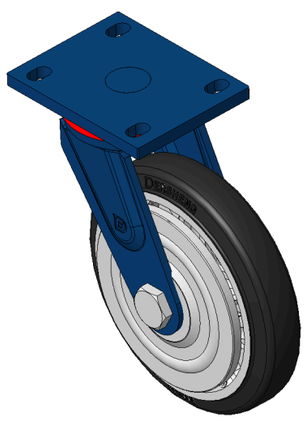

1102 B Type Caster Series
KS-11020800042111 NBR (milling black) Wheel Diameter x Wheel…

| wheel diameter | dynamic load | overall height |
|---|---|---|
| 200 mm | 450 kg | 248 mm |

View specs →

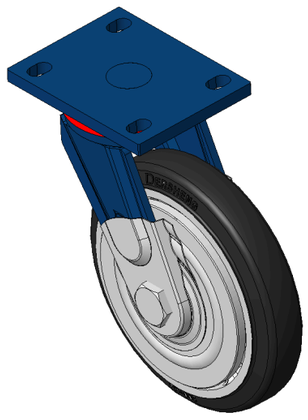

1102 B Type Caster Series
KS-11020800042121 NBR (milling black) Wheel Diameter x Wheel…

| wheel diameter | dynamic load | overall height |
|---|---|---|
| 200 mm | 450 kg | 248 mm |

View specs →