Choose another country or region to see content specific to your location.
United States & Other Regions
Continue

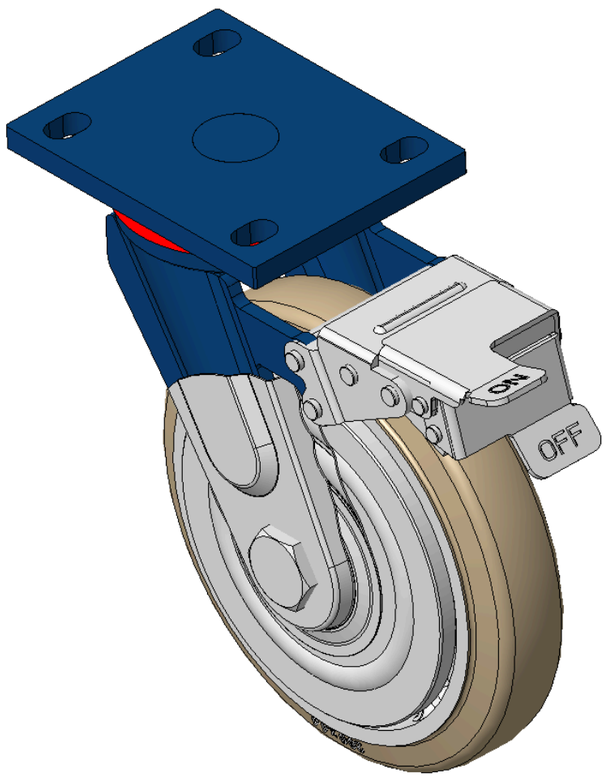

Picture may differ from original product



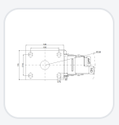

1102 B Type Caster Series

NBR (milling black) Wheel Diameter x Wheel Width 200 x 44mm

KS-11020800044161 Copy model no.

Wheel Diameter	Load Capacity per Wheel (Dynamic)	Overall Height	Wheel Bearing
200mm	350kgs	248mm	Wheels With Ball Bearings

- Equipped with front brake, With locking system Casters, Welded Caster Fork
- Blue painted finish, Mounting Type - Top Plate, 105x77.5mm Bolt Hole Spacing
- Cast Iron Wheel Center, High-Quality, high-elasticity rubber Wheel Tread, Cast Iron finish
- Ball Bearing bearings, with specially designed anti-winding wheel caps
- Wheel surface: Made of high-quality, high-elasticity rubber
- Wheel Center: Iron core / Cast iron core

Product descriptions are for reference only. The actual product shall prevail.

3D Drawing Request

3D drawings are for members only. Please log in to download.

Product Data Sheet

Metric | Imperial

Wheel Diameter	**200mm**	Wheel Width	**44mm**
Wheel Bearing	**Wheels With Ball Bearings**	Plate Size	**140 x 110mm**
Bolt Hole Spacing	**105 x 77.5mm**	Plate Hole	**20 x 13mm**
Offset	**62mm**	Swivel Interference	**370mm**
Overall Height	**248mm**	Swivel Radius	**185mm**
Hardness Of Tread	**° Shore A**	Load Capacity per Wheel (Dynamic)	**350kgs**
Load Capacity per Wheel (Static)	**525kgs**	Temperature	
Fork Type	**Swivel Caster With Front Brake**	Stainless	**N/A**
Electrical Conductivity	**N/A**	Anti-Static	**N/A**
Weight	**6.60kgs**	Standard	**ISO22883**

* For any deviation between metric and imperial spec, please refer to the metric spec.

Performance

Rolling Smoothness
Max. 5 points Score: 3

Quiet Operation
Max. 5 points Score: 4

Floor Surface Preservation
Max. 5 points Score: 4

Downloads

3D **1102-CN-KS2026112628-d261126180654.rar**
3D drawings are for members only. Please log in to download.

Related Products

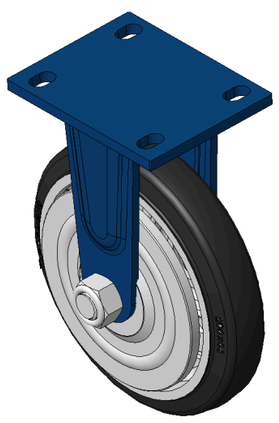

1102 B Type Caster Series
KS-11020800041111 NBR (milling black) Wheel Diameter x Wheel…
wheel diameter 200 mm | dynamic load 450 kg | overall height 248 mm
View specs →

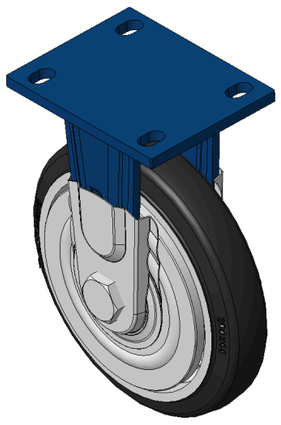

1102 B Type Caster Series
KS-11020800041121 NBR (milling black) Wheel Diameter x Wheel…
wheel diameter 200 mm | dynamic load 450 kg | overall height 248 mm
View specs →

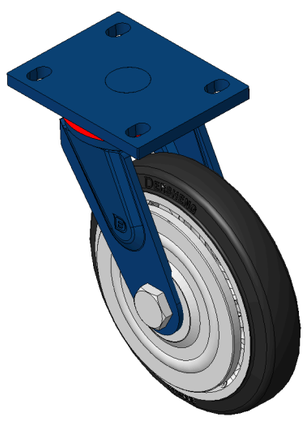

1102 B Type Caster Series
KS-11020800042111 NBR (milling black) Wheel Diameter x Wheel…
wheel diameter 200 mm | dynamic load 450 kg | overall height 248 mm
View specs →

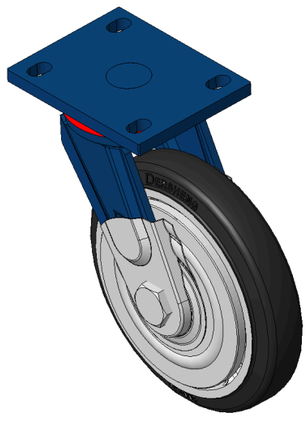

1102 B Type Caster Series
KS-11020800042121 NBR (milling black) Wheel Diameter x Wheel…
wheel diameter 200 mm | dynamic load 450 kg | overall height 248 mm
View specs →