Choose another country or region to see content specific to your location.
United States & Other Regions
Continue

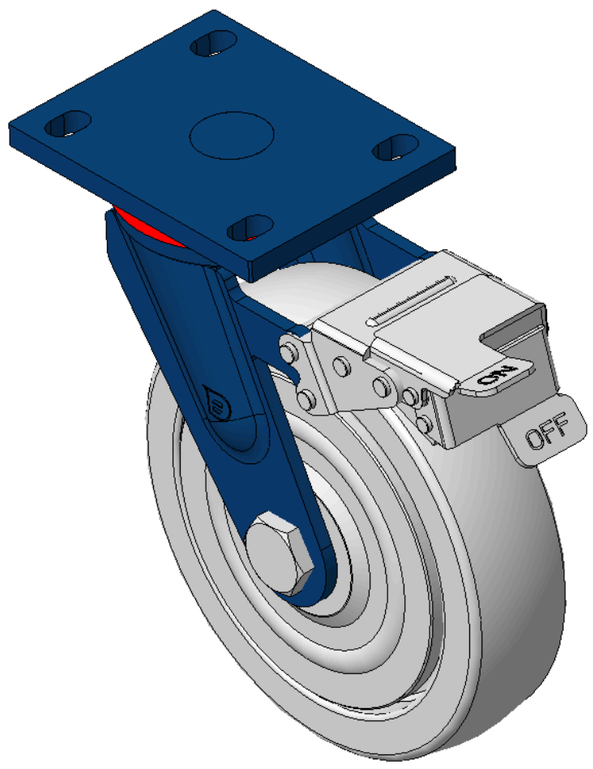

Picture may differ from original product



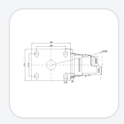

1102 B Type Caster Series

MRC Wheel (Transparent) Wheel Diameter × Wheel Width 200 × 50mm

KS-11020800074111 Copy model no.

Wheel Diameter	Load Capacity per Wheel (Dynamic)	Overall Height	Wheel Bearing
200mm	350kgs	248mm	Wheels With Ball Bearings

- Equipped with front brake, With locking system Casters, Welded Caster Fork
- Blue paint finish, Mounting Type - Top Plate, 105x77.5mm Bolt Hole Spacing
- Reinforced Polypropylene Wheel Center, natural Wheel Tread color
- Bearings—Ball Bearings
- Wheel surface: Thermoplastic (PA6)
- Wheel Center: Thermoplastic (PA6)

Product descriptions are for reference only. The actual product shall prevail.

3D Drawing Request

3D drawings are for members only. Please log in to download.

Product Data Sheet

Metric | Imperial

Wheel Diameter	200mm	Wheel Width	50mm
Wheel Bearing	Wheels With Ball Bearings	Plate Size	140 x 110mm
Bolt Hole Spacing	105 x 77.5mm	Plate Hole	20 x 13mm
Offset	62mm	Swivel Interference	370mm
Overall Height	248mm	Swivel Radius	185mm
Hardness Of Tread	75±5° Shore D	Load Capacity per Wheel (Dynamic)	350kgs
Load Capacity per Wheel (Static)	525kgs	Temperature	-20°C to +80°C
Fork Type	Swivel Caster With Front Brake	Stainless	N/A
Electrical Conductivity	N/A	Anti-Static	N/A
Weight	6.60kgs	Standard	ISO22883

* For any deviation between metric and imperial spec, please refer to the metric spec.

Performance

Rolling Smoothness
Max. 5 points Score: 5

Quiet Operation
Max. 5 points Score: 2

Floor Surface Preservation
Max. 5 points Score: 2

Downloads

3D
1102-CN-KS2026112629-d261126181704.rar
3D drawings are for members only. Please log in to download.

Related Products

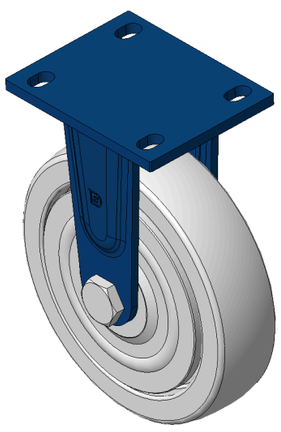

1102 B Type Caster Series
KS-11020800071061 MRC Wheel (Transparent) Wheel Diameter ×…
wheel diameter 200 mm | dynamic load 450 kg | overall height 248 mm
View specs →

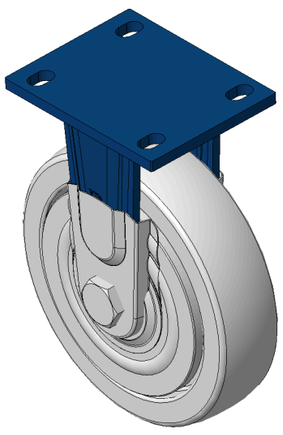

1102 B Type Caster Series
KS-11020800071071 MRC Wheel (Transparent) Wheel Diameter ×…
wheel diameter 200 mm | dynamic load 450 kg | overall height 248 mm
View specs →

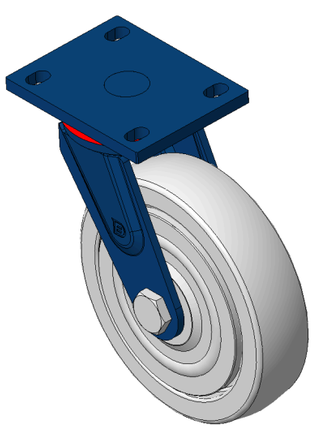

1102 B Type Caster Series
KS-11020800072031 MRC Wheel (Transparent) Wheel Diameter ×…
wheel diameter 200 mm | dynamic load 450 kg | overall height 248 mm
View specs →

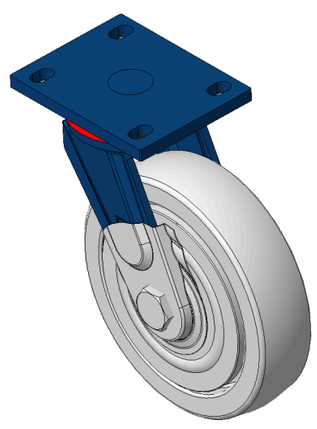

1102 B Type Caster Series
KS-11020800072041 MRC Wheel (Transparent) Wheel Diameter ×…
wheel diameter 200 mm | dynamic load 450 kg | overall height 248 mm
View specs →