Choose another country or region to see content specific to your location.
United States & Other Regions
Continue





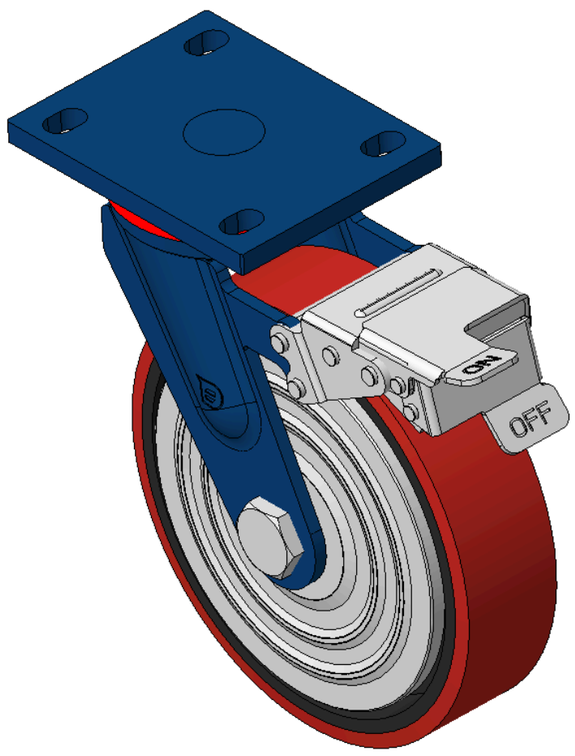


Picture may differ from original product



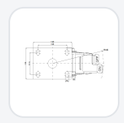

1102 B Type Caster Series

# PU (red flat) Wheel Diameter x Wheel Width 200 x 50mm

KS-11020800334041 Copy model no.

| Wheel Diameter | Load Capacity per Wheel (Dynamic) | Overall Height | Wheel Bearing |
|---|---|---|---|
| 200mm | 350kgs | 248mm | Wheels With Ball Bearings |

- Features front-brake, locking Casters, Welded Caster Fork
- Blue painted finish, Mounting Type - Top Plate, 105x77.5mm Bolt Hole Spacing
- Cast Iron Wheel Center, High Quality Polyurethane Wheel Tread
- Cast Iron red, Bearing—Ball Bearings.
- Wheel Tread: Hhigh-Quality Polyurethane
- Wheel Center: Iron core / Cast iron core

Product descriptions are for reference only. The actual product shall prevail.

Product Data Sheet (Metric)
3D Drawing Request

3D drawings are for members only. Please log in to download.

## Product Data Sheet

Metric | Imperial

| | | | |
|---|---|---|---|
| Wheel Diameter | 200mm | Wheel Width | 50mm |
| Wheel Bearing | Wheels With Ball Bearings | Plate Size | 140 x 110mm |
| Bolt Hole Spacing | 105 x 77.5mm | Plate Hole | 20 x 13mm |
| Offset | 62mm | Swivel Interference | 370mm |
| Overall Height | 248mm | Swivel Radius | 185mm |
| Hardness Of Tread | 92±5° Shore A | Load Capacity per Wheel (Dynamic) | 350kgs |
| Load Capacity per Wheel (Static) | 525kgs | Temperature | -20°C to +70°C |
| Fork Type | Swivel Caster With Front Brake | Stainless | N/A |
| Electrical Conductivity | N/A | Anti-Static | N/A |
| Weight | 6.60kgs | Standard | ISO22883 |

* For any deviation between metric and imperial spec, please refer to the metric spec.

## Performance

**Rolling Smoothness**
Max. 5 points Score: 3

**Quiet Operation**
Max. 5 points Score: 4

**Floor Surface Preservation**
Max. 5 points Score: 4

## Downloads

PDF **1102-EN-KS2026112631.pdf**
Product Data Sheet (Metric)

3D **1102-CN-KS2026112631-d261126190013.rar**
3D drawings are for members only. Please log in to download.

## Related Products

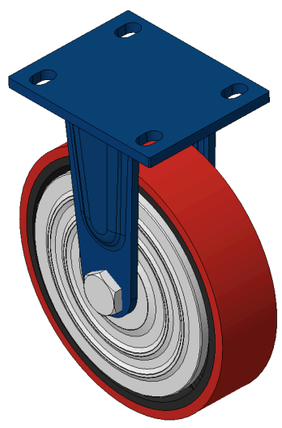

1102 B Type Caster Series
KS-11020800331031 PU (red flat) Wheel Diameter x Wheel Width 20···

| wheel diameter | dynamic load | overall height |
|---|---|---|
| 200 mm | 450 kg | 248 mm |

View specs →

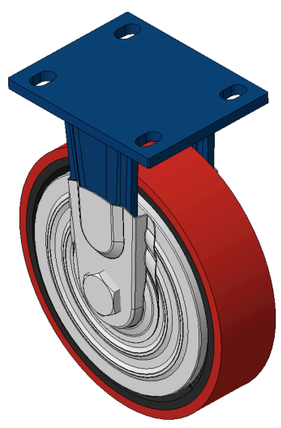

1102 B Type Caster Series
KS-11020800331041 PU (red flat) Wheel Diameter x Wheel Width 20···

| wheel diameter | dynamic load | overall height |
|---|---|---|
| 200 mm | 450 kg | 248 mm |

View specs →

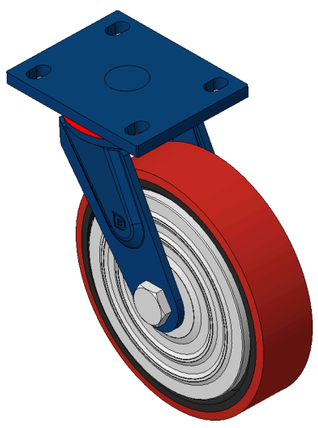

1102 B Type Caster Series
KS-11020800332071 PU (red flat) Wheel Diameter x Wheel Width 20···

| wheel diameter | dynamic load | overall height |
|---|---|---|
| 200 mm | 450 kg | 248 mm |

View specs →

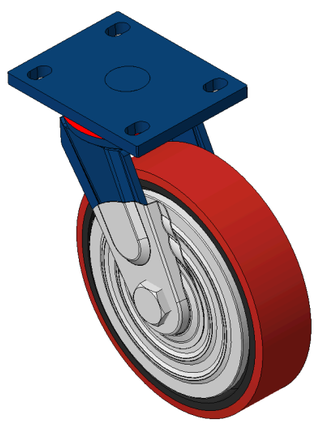

1102 B Type Caster Series
KS-11020800332091 PU (red flat) Wheel Diameter x Wheel Width 20···

| wheel diameter | dynamic load | overall height |
|---|---|---|
| 200 mm | 450 kg | 248 mm |

View specs →