Choose another country or region to see content specific to your location.
United States & Other Regions
Continue

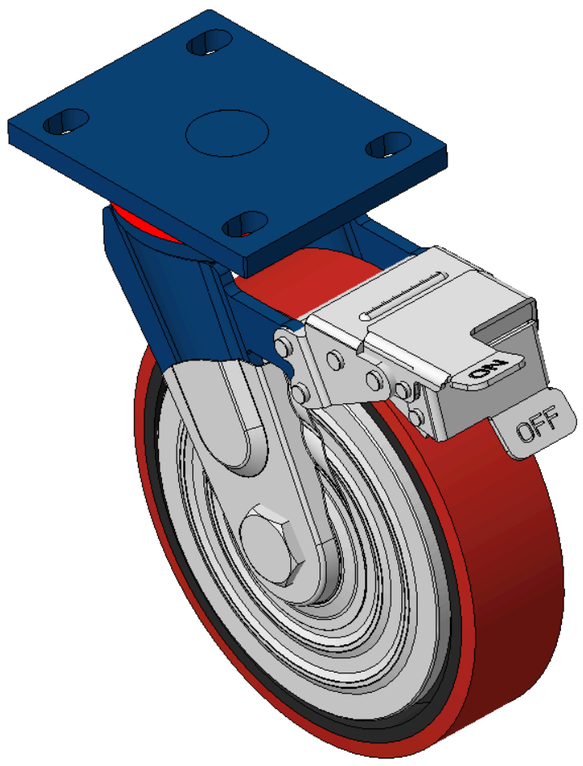

Picture may differ from original product



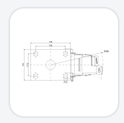

1102 B Type Caster Series

PU (red flat) Wheel Diameter x Wheel Width 200 x 50mm

KS-11020800334091 Copy model no.

Wheel Diameter	Load Capacity per Wheel (Dynamic)	Overall Height	Wheel Bearing
200mm	350kgs	248mm	Wheels With Ball Bearings

- Features front-brake locking Casters, Welded Caster Fork.
- Blue paint finish, Mounting Type - Top Plate, 105x77.5mm Bolt Hole Spacing.
- Cast Iron Wheel Center, High Quality Polyurethane Wheel Tread.
- Cast Iron red Bearing—Ball Bearings, with specially designed anti-winding wheel covers.
- Wheel Tread: Hhigh-Quality Polyurethane
- Wheel Center: Iron core / Cast iron core

Product descriptions are for reference only. The actual product shall prevail.

Product Data Sheet | 3D Drawing Request

3D drawings are for members only. Please log in to download.

Product Data Sheet

Metric | Imperial

Wheel Diameter	200mm	Wheel Width	50mm
Wheel Bearing	Wheels With Ball Bearings	Plate Size	140 x 110mm
Bolt Hole Spacing	105 x 77.5mm	Plate Hole	20 x 13mm
Offset	62mm	Swivel Interference	370mm
Overall Height	248mm	Swivel Radius	185mm
Hardness Of Tread	92±5° Shore A	Load Capacity per Wheel (Dynamic)	350kgs
Load Capacity per Wheel (Static)	525kgs	Temperature	-20°C to +70°C
Fork Type	Swivel Caster With Front Brake	Stainless	N/A
Electrical Conductivity	N/A	Anti-Static	N/A
Weight	6.60kgs	Standard	ISO22883

* For any deviation between metric and imperial spec, please refer to the metric spec.

Performance

Rolling Smoothness
Max. 5 points Score: 3

Quiet Operation
Max. 5 points Score: 4

Floor Surface Preservation
Max. 5 points Score: 4

Downloads

PDF **1102-EN-KS2026112632.pdf**
Product Data Sheet

3D **1102-CN-KS2026112632-d261126190434.rar**
3D drawings are for members only. Please log in to download.

Related Products

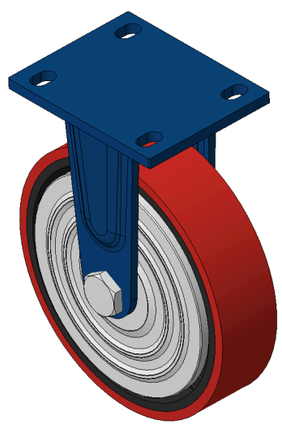

1102 B Type Caster Series
KS-11020800331031 PU (red flat) Wheel Diameter x Wheel Width 20···
wheel diameter 200 mm | dynamic load 450 kg | overall height 248 mm
View specs →

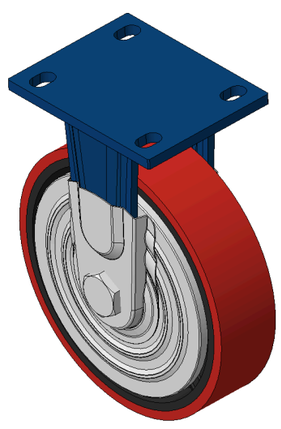

1102 B Type Caster Series
KS-11020800331041 PU (red flat) Wheel Diameter x Wheel Width 20···
wheel diameter 200 mm | dynamic load 450 kg | overall height 248 mm
View specs →

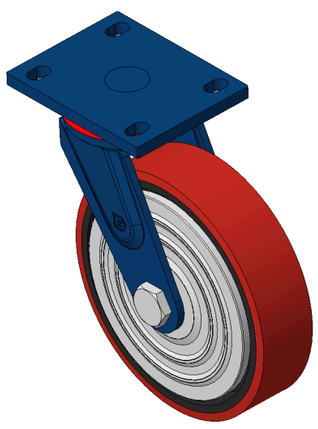

1102 B Type Caster Series
KS-11020800332071 PU (red flat) Wheel Diameter x Wheel Width 20···
wheel diameter 200 mm | dynamic load 450 kg | overall height 248 mm
View specs →

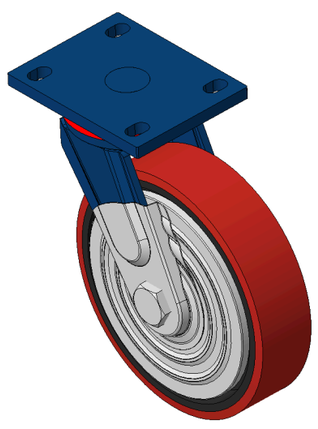

1102 B Type Caster Series
KS-11020800332091 PU (red flat) Wheel Diameter x Wheel Width 20···
wheel diameter 200 mm | dynamic load 450 kg | overall height 248 mm
View specs →