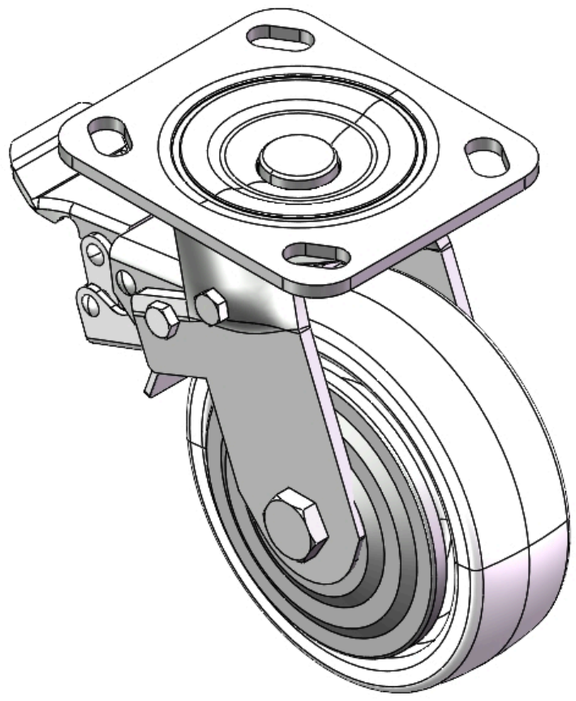

Picture may differ from original product


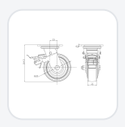
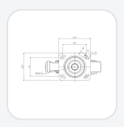

1124 1-1/2" Wide General Purposes Caster Series

MRC (Transparent) Wheel Diameter × Wheel Width 125 x 40mm

YJ-11240500074023 Copy model no.

Wheel Diameter	Load Capacity (Dynamic)	Overall Height	Wheel Bearing
125mm	250kgs	164.5mm	Wheels With Ball Bearings

- Casters with a center brake and With locking system. Top Plate Riveted and Stamping 85 x 70mm (3-3/8" x 2-3/4") Bolt Hole Spacing.
- Zine-Plated, Top Plate (4.5T) Mounting Type system.
- Reinforced Polypropylene Wheel Center and Wheel Tread.
- Transparent. Bearings—Ball Bearings.
- Wheel tread: Thermoplastic (PA6)
- Wheel Center: Thermoplastic (PA6)

Product descriptions are for reference only. The actual product shall prevail.

Product Data Sheet (Metric) | 3D Drawing Request

3D drawings are for members only. Please log in to download.

Product Data Sheet

Metric | Imperial

Wheel Diameter	125mm	Wheel Width	40mm
Wheel Bearing	Wheels With Ball Bearings	Plate Size	115 x 100mm
Bolt Hole Spacing	85 x 70mm	Plate Hole	20 x 11mm
Offset	33mm	Swivel Interference	214mm
Overall Height	164.5mm	Swivel Radius	107mm
Hardness Of Tread	75±5° Shore D	Load Capacity (Dynamic)	250kgs
Load Capacity (Static)	375kgs	Temperature	-20°C to +80°C
Fork Type	Swivel Caster With Rear Brake	Stainless	N/A
Electrical Conductivity	N/A	Anti-Static	N/A
Weight	2.15kgs	Standard	ISO22883

* For any deviation between metric and imperial spec, please refer to the metric spec.

Performance

Rolling Smoothness
Max. 5 points Score: 5

Quiet Operation
Max. 5 points Score: 2

Floor Surface Preservation
Max. 5 points Score: 2

Downloads

PDF **YJ-112405000740233.pdf**
Product Data Sheet (Metric)

3D **11240500074023.rar**
3D drawings are for members only. Please log in to download.

Related Products



1124 1-1/2" Wide General Purposes Caster Seri
MRC (Transparent) Wheel Diameter × Wheel Width 125 x 40mm
YJ-11240500071013
wheel diameter 125 mm | dynamic load 250 kg | overall height 164.5 mm
View specs →

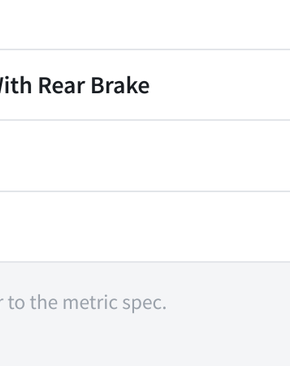

1124 1-1/2" Wide General Purposes Caster Ser
MRC (Transparent) Wheel Diameter × Wheel Width 125 x 40mm
YJ-11240500072013
wheel diameter 125 mm | dynamic load 250 kg | overall height 164.5 mm
View specs →

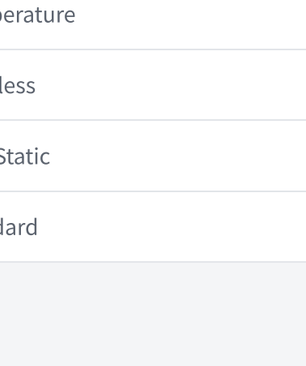

1124 1-1/2" Wide General Purposes Caster Seri
MRC (Transparent) Wheel Diameter × Wheel Width 125 x 40mm
YJ-11240500074033
wheel diameter 125 mm | dynamic load 250 kg | overall height 164.5 mm
View specs →

1124 1-1/2" Wide General Purposes Caster Ser
MRC (Transparent) Wheel Diameter × Wheel Width 125 x 40mm
YJ-11240500074013
wheel diameter 125 mm | dynamic load 250 kg | overall height 164.5 mm
View specs →