Choose another country or region to see content specific to your location.
United States & Other Regions
Continue

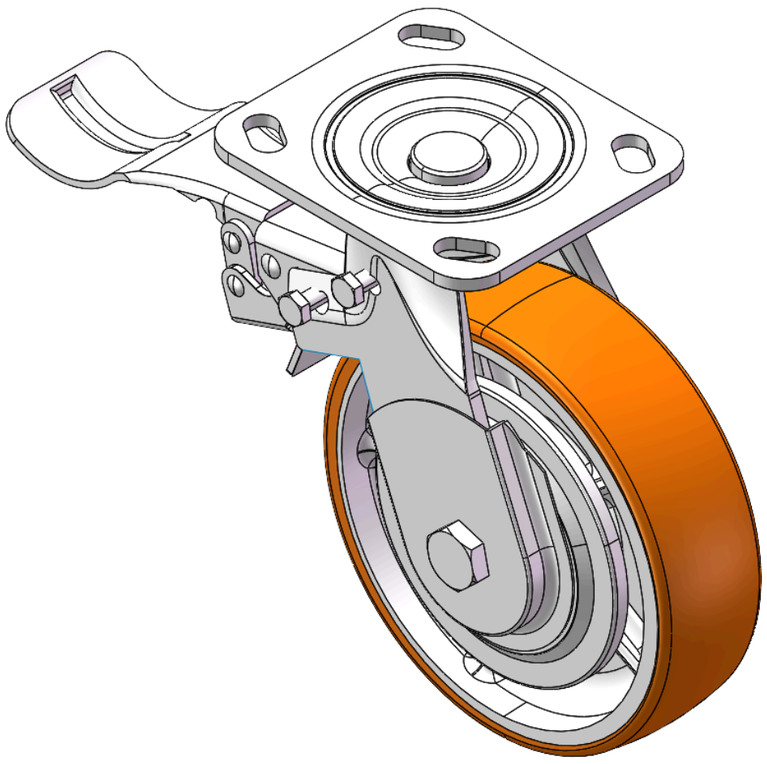

Picture may differ from original product


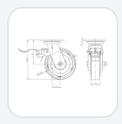

1124 1-1/2" Wide General Purposes Caster Series

QPU (Brown round) Wheel Diameter × Wheel Width 150 x 42mm

YJ-11240600534013 Copy model no.

Wheel Diameter	Load Capacity per Wheel (Dynamic)	Overall Height	Wheel Bearing
150mm	600kgs	189mm	Wheels With Ball Bearings

- Equipped with center-locking Casters. Riveted and Stamping Top Plate legs 85 x 70mm (3-3/8" x 2-3/4") Bolt Hole Spacing.
- Zine-Plated surface, Top Plate type (4.5T) Mounting Type device.
- Cast Iron Wheel Center, High Quality Polyurethane Wheel Tread.
- Brown color, Bearing—Ball Bearings, with specially designed anti-winding wheel covers.
- Wheel surface: High-quality polyurethane
- Wheel Center: cast iron core

Product descriptions are for reference only. The actual product shall prevail.

3D Drawing Request

3D drawings are for members only. Please log in to download.

Product Data Sheet

Metric | Imperial

Wheel Diameter	**150mm**	Wheel Width	**42mm**
Wheel Bearing	**Wheels With Ball Bearings**	Plate Size	**115 x 100mm**
Bolt Hole Spacing	**85 x 70mm**	Plate Hole	**20 x 11mm**
Offset	**39mm**	Swivel Interference	**334mm**
Overall Height	**189mm**	Swivel Radius	**167mm**
Hardness Of Tread	**90±5° Shore A**	Load Capacity per Wheel (Dynamic)	**600kgs**
Load Capacity per Wheel (Static)	**900kgs**	Temperature	**-30°C to +70°C**
Fork Type	**Swivel Caster With Rear Brake**	Stainless	**N/A**
Electrical Conductivity	**N/A**	Anti-Static	**N/A**
Weight	**3.54kgs**	Standard	**ISO22883**

* For any deviation between metric and imperial spec, please refer to the metric spec.

Performance

Rolling Smoothness
Max. 5 points Score: 5

Quiet Operation
Max. 5 points Score: 4

Floor Surface Preservation
Max. 5 points Score: 3

Applications

Ideal for indoor equipment and carts that are moved often and need quiet rolling and stable positioning.

- **Manufacturing & Automated Lines:** Production equipment, fixture carts, inspection machines, material transfer carts and mobile workstations.
- **Warehousing & Logistics:** Picking carts, roll cages, platform trucks and material handling carts.

Compatible Equipment

Can be fitted to all kinds of equipment and carriers that need to move, turn or be positioned.

- **Material Handling Carts:** Material carts, platform trucks, roll cages, picking carts and transfer carts.

Suitable Floors

Suitable for most flat, hard indoor floors; final selection should still consider load, wheel diameter, wheel material and frequency of use.

- **Smooth Concrete Floors:** For factory production lines, warehouses and general work areas.
- **Indoor Industrial Floors:** For most manufacturing, processing and logistics environments.

Downloads

3D **1124-CN-YJ2026112705-d261127150735.rar**
3D drawings are for members only. Please log in to download.

Related Products