Choose another country or region to see content specific to your location.
United States & Other Regions
Continue

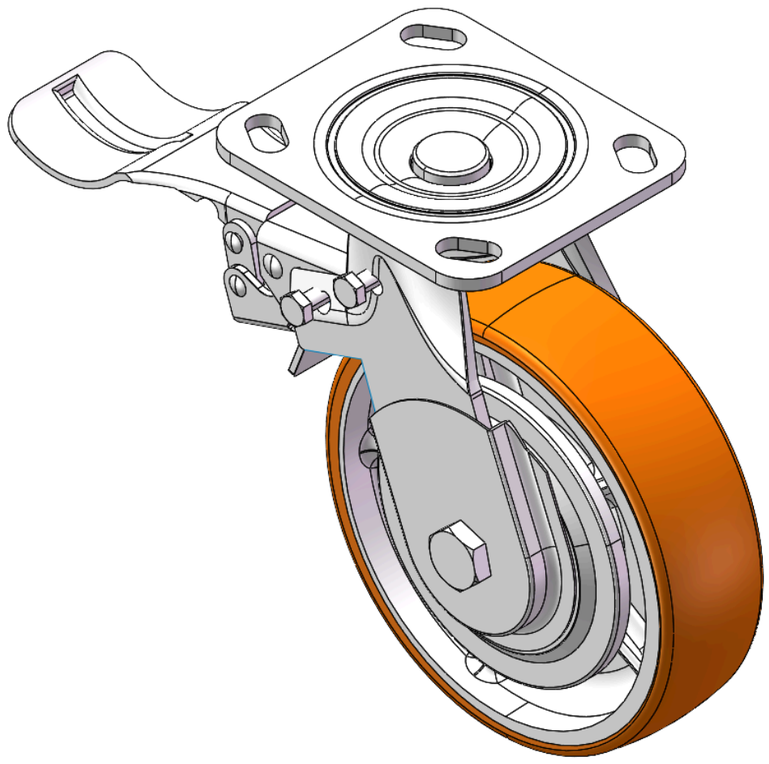

Picture may differ from original product


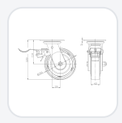

1124 1-1/2" Wide General Purposes Caster Series

QPU (Brown round) Wheel Diameter × Wheel Width 150 x 42mm

YJ-11240600534013 Copy model no.

Wheel Diameter	Load Capacity per Wheel (Dynamic)	Overall Height	Wheel Bearing
150mm	600kgs	189mm	Wheels With Ball Bearings

- Equipped with center-locking Casters. Riveted and Stamping Top Plate legs 85 x 70mm (3-3/8" x 2-3/4") Bolt Hole Spacing.
- Zine-Plated surface, Top Plate type (4.5T) Mounting Type device.
- Cast Iron Wheel Center, High Quality Polyurethane Wheel Tread.
- Brown color, Bearing—Ball Bearings, with specially designed anti-winding wheel covers.
- Wheel surface: High-quality polyurethane
- Wheel Center: cast iron core

Product descriptions are for reference only. The actual product shall prevail.

Product Data Sheet | 3D Drawing Request

3D drawings are for members only. Please log in to download.

Product Data Sheet

Metric | Imperial

Wheel Diameter	150mm	Wheel Width	42mm
Wheel Bearing	Wheels With Ball Bearings	Plate Size	115 x 100mm
Bolt Hole Spacing	85 x 70mm	Plate Hole	20 x 11mm
Offset	39mm	Swivel Interference	334mm
Overall Height	189mm	Swivel Radius	167mm
Hardness Of Tread	90±5° Shore A	Load Capacity per Wheel (Dynamic)	600kgs
Load Capacity per Wheel (Static)	900kgs	Temperature	-30°C to +70°C
Fork Type	Swivel Caster With Rear Brake	Stainless	N/A
Electrical Conductivity	N/A	Anti-Static	N/A
Weight	3.54kgs	Standard	ISO22883

* For any deviation between metric and imperial spec, please refer to the metric spec.

Performance

Rolling Smoothness
Max. 5 points Score: 5

Quiet Operation
Max. 5 points Score: 4

Floor Surface Preservation
Max. 5 points Score: 3

Applications

Ideal for indoor equipment and carts that are moved often and need quiet rolling and stable positioning.

- **Manufacturing & Automated Lines:** Production equipment, fixture carts, inspection machines, material transfer carts and mobile workstations.
- **Warehousing & Logistics:** Picking carts, roll cages, platform trucks and material handling carts.

Compatible Equipment

Can be fitted to all kinds of equipment and carriers that need to move, turn or be positioned.

- **Material Handling Carts:** Material carts, platform trucks, roll cages, picking carts and transfer carts.

Suitable Floors

Suitable for most flat, hard indoor floors; final selection should still consider load, wheel diameter, wheel material and frequency of use.

- **Smooth Concrete Floors:** For factory production lines, warehouses and general work areas.
- **Indoor Industrial Floors:** For most manufacturing, processing and logistics environments.

Downloads

PDF **1124-EN-YJ2026112705.pdf**
Product Data Sheet

3D **1124-CN-YJ2026112705-d261127150735.rar**
3D drawings are for members only. Please log in to download.

Related Products