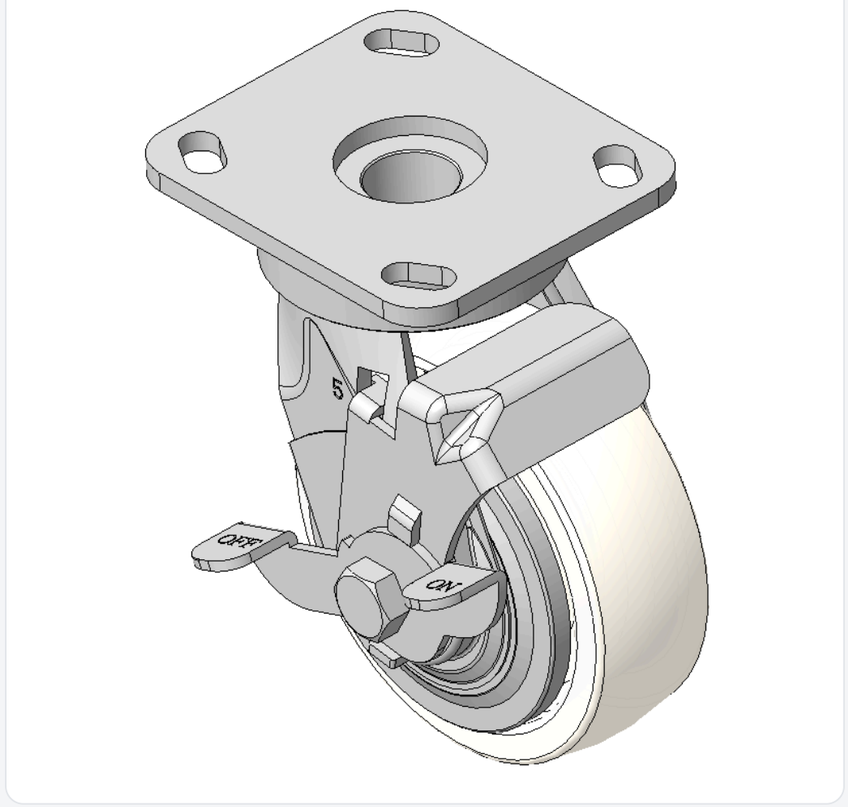

Picture may differ from original product





1141 Kingpinless Caster Series

CPD Wheel Diameter x Wheel Width 125 x 40mm

KS-11410500294023 Copy model no.

Wheel Diameter	Load Capacity (Dynamic)	Overall Height	Wheel Bearing
125mm	250kgs	166.5mm	Wheels With Ball Bearings

- Casters with Side Brakes and With locking system, Welded Caster Fork
- Zine-Plated, Mounting Type - Top Plate, 85x70 Bolt Hole Spacing
- Polypropylene Wheel Center, natural Wheel Tread
- Bearings—Ball Bearings with special Anti-thread wheel cover
- Wheel surface: PP polypropylene
- Wheel Center: PP polypropylene

Product descriptions are for reference only. The actual product shall prevail.

Product Data Sheet (Metric) | 3D Drawing Request

3D drawings are for members only. Please log in to download.

Product Data Sheet

Metric | Imperial

Wheel Diameter	125mm	Wheel Width	40mm
Wheel Bearing	Wheels With Ball Bearings	Plate Size	115 x 100mm
Bolt Hole Spacing	85 x 70mm	Plate Hole	20 x 11mm
Offset	29mm	Swivel Interference	204mm
Overall Height	166.5mm	Swivel Radius	102mm
Hardness Of Tread	72±5° Shore D	Load Capacity (Dynamic)	250kgs
Load Capacity (Static)	375kgs	Temperature	-12°C to +60°C
Fork Type	Swivel Caster With Side Brake	Stainless	N/A
Electrical Conductivity	N/A	Anti-Static	N/A
Weight	2.48kgs	Standard	ISO22883

* For any deviation between metric and imperial spec, please refer to the metric spec.

Performance

Rolling Smoothness
Max. 5 points Score: 5

Quiet Operation
Max. 5 points Score: 3

Floor Surface Preservation
Max. 5 points Score: 3

Downloads

PDF **KS-114105002940233.pdf**
Product Data Sheet (Metric)

3D **KS-11410500294023.zip**
3D drawings are for members only. Please log in to download.

Related Products

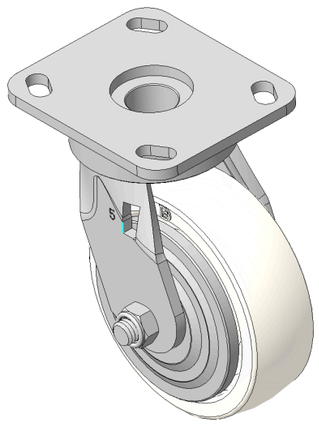

1141 Kingpinless Caster Series
CPD Wheel Diameter x Wheel Width 125 x 40mm
KS-11410500292013

wheel diameter	dynamic load	overall height
125 mm	250 kg	166.5 mm

View specs →

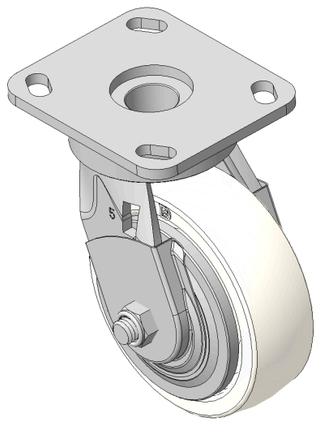

1141 Kingpinless Caster Series
CPD Wheel Diameter x Wheel Width 125 x 40mm
KS-11410500292023

wheel diameter	dynamic load	overall height
125 mm	250 kg	166.5 mm

View specs →

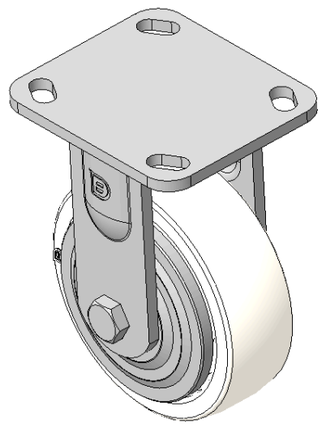

1141 Kingpinless Caster Series
CPD Wheel Diameter x Wheel Width 125 x 40mm
KS-11410500291013

wheel diameter	dynamic load	overall height
125 mm	250 kg	166.5 mm

View specs →

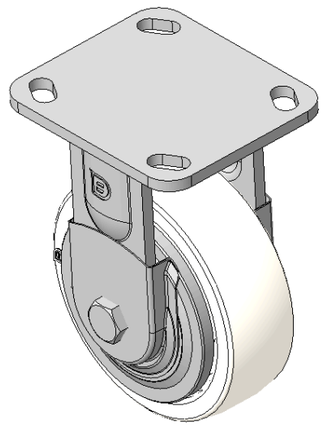

1141 Kingpinless Caster Series
CPD Wheel Diameter x Wheel Width 125 x 40mm
KS-11410500291023

wheel diameter	dynamic load	overall height
125 mm	250 kg	166.5 mm

View specs →