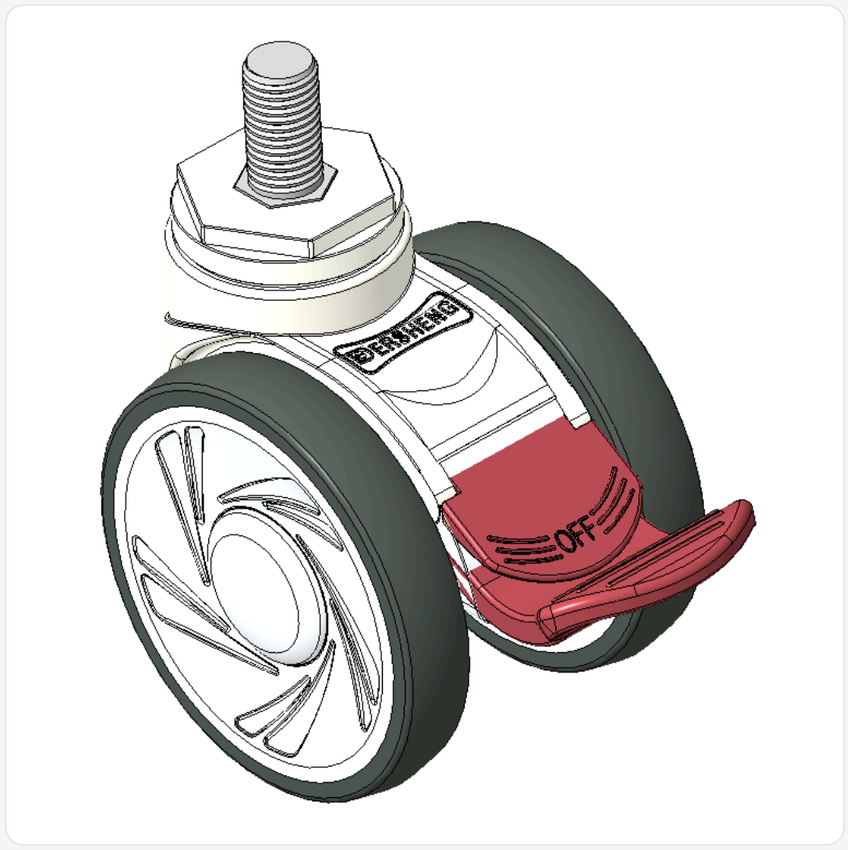


Picture may differ from original product



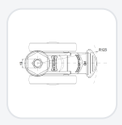

1146 46 Ascendant Series Caster Series(All Plastic)

# Double-Ball Full-Effect Wheel (White-Dark Gray) Wheel Diameter × Wheel Width 100 × 18mm

KS-11460400266033A Copy model no.

| Wheel Diameter | Load Capacity (Dynamic) | Overall Height | Wheel Bearing |
|---|---|---|---|
| 100mm | 90kgs | 120mm | Wheels With Ball Bearings |

- Short Total Brake Casters, Threaded Stem M16×30
- White Caster Fork made of polypropylene reinforced material
- Rust-proof, Corrosion resistant, Attractive appearance, Economical, and highly maneuverable
- High-Quality Impact-Resistant Polypropylene Wheel Center, High-Quality Reinforced Polypropylene Rubber (TPR) Wheel Tread
- Dark gray, Bearing—Ball Bearings
- Wheel tread: Thermoplastic rubber elastomer (TPR)
- Wheel Center: Made of high-quality impact-resistant polypropylene

Product descriptions are for reference only. The actual product shall prevail.

Product Data Sheet (Metric) | 3D Drawing Request

3D drawings are for members only. Please log in to download.

## Product Data Sheet

Metric | Imperial

| | | | |
|---|---|---|---|
| Wheel Diameter | 100mm | Wheel Width | 85mm |
| Wheel Bearing | Wheels With Ball Bearings | Threaded Stem | M16 |
| Threaded Length | 30mm | Overall Height | 120mm |
| Hardness Of Tread | 82±5° Shore A | Load Capacity (Dynamic) | 90kgs |
| Load Capacity (Static) | 135 kgs | Temperature | -20°C to +60°C |
| Fork Type | Rigid Caster | Stainless | N/A |
| Electrical Conductivity | N/A | Anti-Static | N/A |
| Weight | 0.25kgs | Standard | ISO22881 |

* For any deviation between metric and imperial spec, please refer to the metric spec.

## Performance

**Rolling Smoothness**
Max. 5 points Score: 4

**Quiet Operation**
Max. 5 points Score: 4

**Floor Surface Preservation**
Max. 5 points Score: 5

## Downloads

PDF **1146-EN-KS2026102717.pdf**
Product Data Sheet (Metric)

3D **KS-11460400266033A.rar**
3D drawings are for members only. Please log in to download.

## Related Products

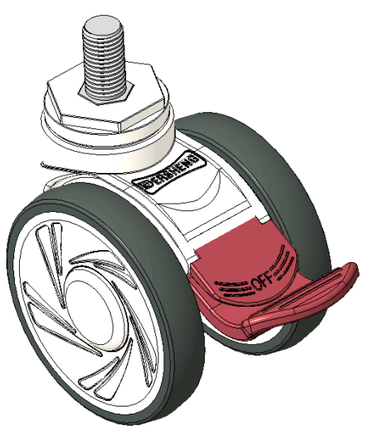


1146 46 Ascendant Series Caster Series(All Pla:
**Double-Ball Full-Effect Wheel (White-Dark Gray) Wheel Diamete…**
KS-11460400456033

| wheel diameter | dynamic load | overall height |
|---|---|---|
| 100 mm | 100 kg | 120 mm |

View specs →

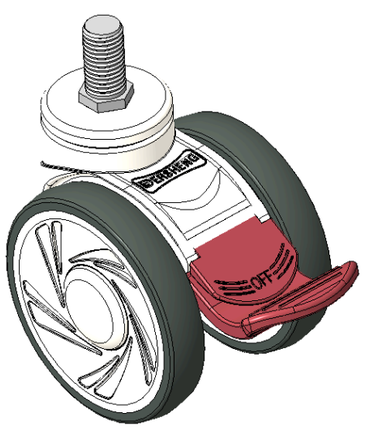


1146 46 Ascendant Series Caster Series(All Pla:
**Double-Ball Full-Effect Wheel (White-Dark Gray) Wheel Diamete…**
KS-11460400456643

| wheel diameter | dynamic load | overall height |
|---|---|---|
| 100 mm | 100 kg | 120 mm |

View specs →

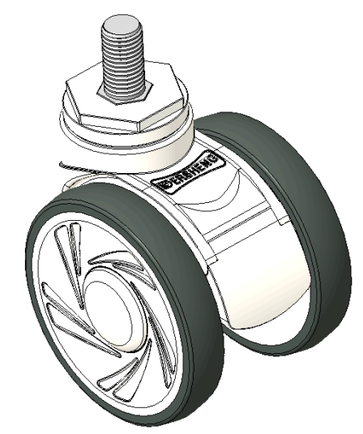


1146 46 Ascendant Series Caster Series(All Pla:
**Double-Ball Full-Effect Wheel (White-Dark Gray) Wheel Diamete…**
KS-11460400455033

| wheel diameter | dynamic load | overall height |
|---|---|---|
| 100 mm | 100 kg | 120 mm |

View specs →

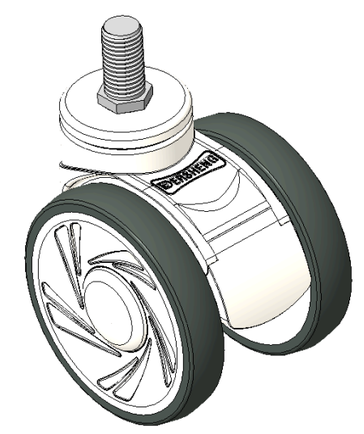


1146 46 Ascendant Series Caster Series(All Pla:
**Double-Ball Full-Effect Wheel (White-Dark Gray) Wheel Diamete…**
KS-11460400455643

| wheel diameter | dynamic load | overall height |
|---|---|---|
| 100 mm | 100 kg | 120 mm |

View specs →