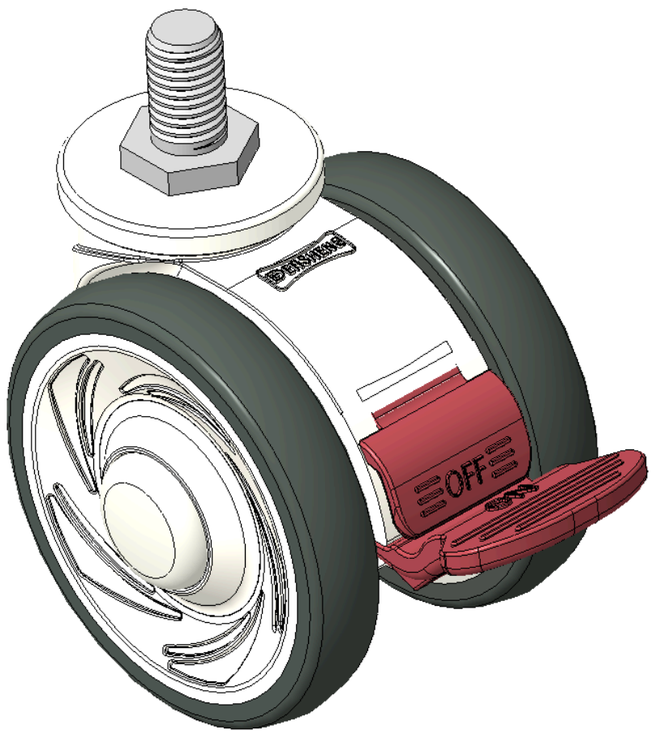

Picture may differ from original product


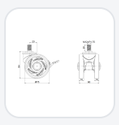
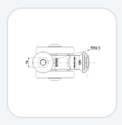

1146 46 Ascendant Series Caster Series(All Plastic)

Double-Ball Full-Effect Wheel (White-Dark Gray) Wheel Diameter × Wheel Width 75 × 14mm

KS-11460300456153 Copy model no.

Wheel Diameter	Load Capacity (Dynamic)	Overall Height	Wheel Bearing
75mm	90kgs	84mm	Wheels With Ball Bearings

- Short Total Brake Casters, Threaded Stem M12x20
- White Caster Fork made of polypropylene reinforced material
- Rust-proof, Corrosion resistant, Attractive appearance, Economical, and allows for smooth rotation
- High-Quality Impact-Resistant Polypropylene Wheel Center, High-Quality Reinforced Polypropylene Rubber (TPR) Wheel Tread
- Dark gray, Bearing—Ball Bearings
- Wheel tread: Thermoplastic rubber elastomer (TPR)
- Wheel Center: Made of high-quality impact-resistant polypropylene

Product descriptions are for reference only. The actual product shall prevail.

Product Data Sheet (Metric) | 3D Drawing Request

3D drawings are for members only. Please log in to download.

Product Data Sheet

Metric | Imperial

Wheel Diameter	75mm	Wheel Width	60mm
Wheel Bearing	Wheels With Ball Bearings	Threaded Stem	M12
Threaded Length	20mm	Offset	23mm
Swivel Interference	179mm	Overall Height	84mm
Swivel Radius	89.5mm	Hardness Of Tread	72±5° Shore A
Load Capacity (Dynamic)	90kgs	Load Capacity (Static)	135kgs
Temperature	-20°C to +60°C	Fork Type	Swivel Caster With Total Brake
Stainless	N/A	Electrical Conductivity	N/A
Anti-Static	N/A	Weight	0.31kgs
Standard	ISO22881		

* For any deviation between metric and imperial spec, please refer to the metric spec.

Performance

Rolling Smoothness
Max. 5 points Score: 5

Quiet Operation
Max. 5 points Score: 5

Floor Surface Preservation
Max. 5 points Score: 5

Downloads

PDF **1146-EN-KS2026110409.pdf**
Product Data Sheet (Metric)

3D **1146-CN-KS2026110409-d261104184026.rar**
3D drawings are for members only. Please log in to download.

© 2026 DERSHENG CO., LTD. All rights reserved.