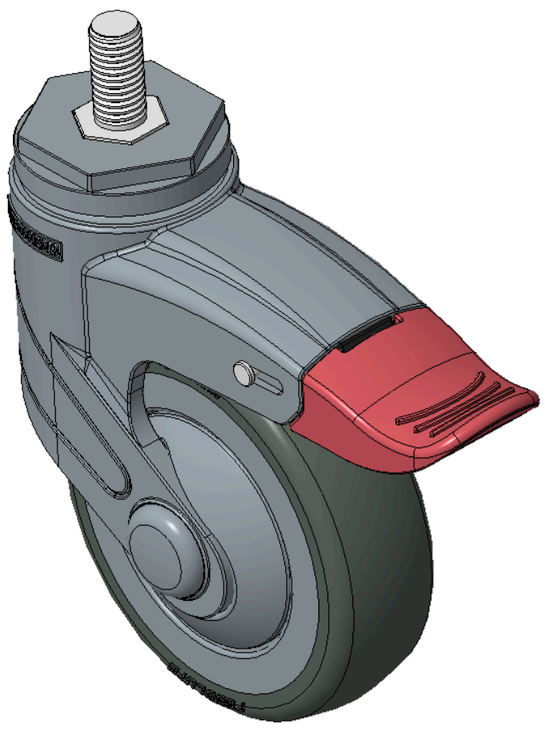

Picture may differ from original product


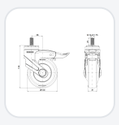
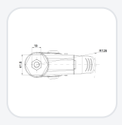

1155 STAT Series Caster Series (All Plastic)

Resolute (blue gray) Wheel Diameter × Wheel Width 100 x 31mm

KS-11550400456053H Copy model no.

Wheel Diameter	Load Capacity (Dynamic)	Overall Height	Wheel Bearing
100mm	90kgs	139mm	Wheels With Ball Bearings

- Extra-long double-brake, With locking system Casters, Threaded Stem M12x25
- Blue-gray legs made of polyamide reinforcement, Threaded Stem installation
- Rust-proof, Corrosion resistant, Attractive appearance, Economical, and highly maneuverable
- High-Quality Impact-Resistant Polypropylene Wheel Center, High-Quality Reinforced Polypropylene Rubber (TPR) Wheel Tread
- Dark gray wheels—with Dust Cap
- Wheel tread: Thermoplastic rubber elastomer (TPR)
- Wheel Center: Made of high-quality impact-resistant polypropylene

Product descriptions are for reference only. The actual product shall prevail.

Product Data Sheet (Metric) | 3D Drawing Request

3D drawings are for members only. Please log in to download.

Product Data Sheet

Metric | Imperial

Wheel Diameter	100mm	Wheel Width	31mm
Wheel Bearing	Wheels With Ball Bearings	Threaded Stem	M12×P1.75
Threaded Length	25mm	Offset	36mm
Swivel Interference	251mm	Overall Height	139mm
Swivel Radius	125.5mm	Hardness Of Tread	72±5° Shore A
Load Capacity (Dynamic)	90kgs	Load Capacity (Static)	135kgs
Temperature	-20°C to +60°C	Fork Type	Swivel Caster With Total Brake
Stainless	N/A	Electrical Conductivity	N/A
Anti-Static	N/A	Weight	0.54kgs
Standard	ISO22883		

* For any deviation between metric and imperial spec, please refer to the metric spec.

Performance

Rolling Smoothness
Max. 5 points Score: 5

Quiet Operation
Max. 5 points Score: 5

Floor Surface Preservation
Max. 5 points Score: 5

Applications

Ideal for indoor equipment and carts that are moved often and need quiet rolling and stable positioning.

- **Food Factories & Food Service:** Central kitchens, bakery areas, food prep areas, worktable carts, food carts and ingredient carts.
- **Laboratories & Cleanrooms:** Precision instruments, testing equipment, lab carts and mobile workbenches.
- **Medical & Healthcare Settings:** Medical carts, meal delivery carts, care equipment and instrument stands in hospitals, clinics and long-term care facilities.

Compatible Equipment

Can be fitted to all kinds of equipment and carriers that need to move, turn or be positioned.

- **Tool & Workbench Carts:** Maintenance tool carts, parts carts, assembly carts and mobile workstations.
- **Medical & Care Carts:** Medical carts, treatment carts, meal delivery carts and care equipment.
- **Machinery & Instrument Bases:** Production equipment, machining equipment, testing equipment and laboratory instruments.

Suitable Floors

Suitable for most flat, hard indoor floors; final selection should still consider load, wheel diameter, wheel material and frequency of use.

- **Epoxy / PU Floors:** Common in factories, laboratories and commercial spaces; suited to frequent pushing.
- **Tile, Stone & Marble Floors:** For healthcare, office, retail and premium indoor spaces; low-noise, floor-friendly wheel materials are recommended.
- **Indoor Industrial Floors:** For most manufacturing, processing and logistics environments.
- **PVC / Vinyl Floors:** For healthcare, office, commercial and home spaces; quieter, floor-protecting wheel materials are recommended.

Downloads

PDF **1155-EN-KS2026102201.pdf**
Product Data Sheet (Metric)

3D **1155-CN-KS2026102201-d261109094932.rar**
3D drawings are for members only. Please log in to download.

Related Products