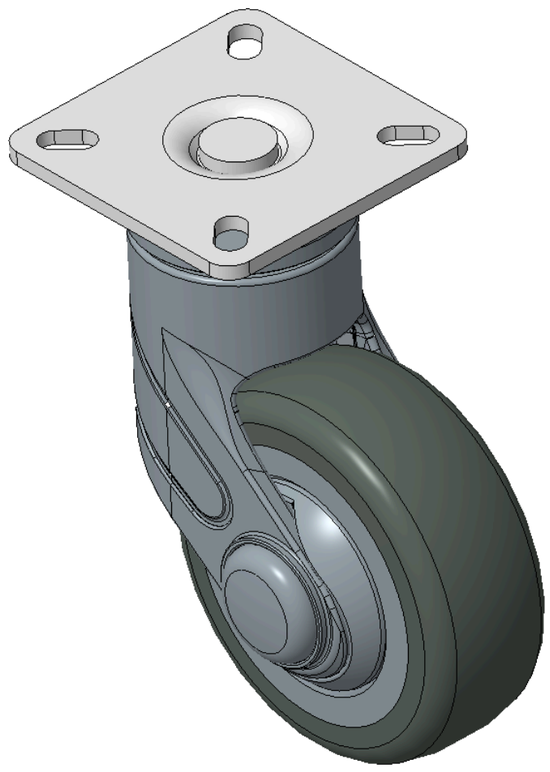

Picture may differ from original product


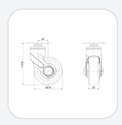
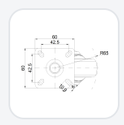

1155 STAT Series Caster Series (All Plastic)

Resolute (blue gray) Wheel Diameter x Wheel Width 75 x 27mm

KS-11550300262013 Copy model no.

Wheel Diameter	Load Capacity (Dynamic)	Overall Height	Wheel Bearing
75mm	50kgs	113.5mm	Wheels With Ball Bearings

- Swivel Casters, Top Plate—42.5x42.5mm Bolt Hole Spacing.
- The Fork is made of polyamide reinforced material, with a Mounting Type - Top Plate.
- Rust-proof, Corrosion resistant, Attractive appearance, Economical, and allows for Smooth rotation.
- High-Quality Impact-Resistant Polypropylene Wheel Center, High-Quality Reinforced Polypropylene Rubber (TPR) Wheel Tread.
- Dark gray, wheels—with Dust Cap.
- Wheel tread: Thermoplastic rubber elastomer (TPR)
- Wheel Center: Made of high-quality impact-resistant polypropylene

Product descriptions are for reference only. The actual product shall prevail.

Product Data Sheet (Metric) | 3D Drawing Request

3D drawings are for members only. Please log in to download.

Product Data Sheet

Metric | Imperial

Wheel Diameter	75mm	Wheel Width	27mm
Wheel Bearing	Wheels With Ball Bearings	Plate Size	60 x 60mm
Bolt Hole Spacing	42.5 x 42.5mm	Plate Hole	10.9 x 6mm
Offset	27mm	Swivel Interference	130mm
Overall Height	113.5mm	Swivel Radius	65mm
Hardness Of Tread	82±5° Shore A	Load Capacity (Dynamic)	50kgs
Load Capacity (Static)	75kgs	Temperature	-20°C to +60°C
Fork Type	Swivel Caster	Stainless	N/A
Electrical Conductivity	N/A	Anti-Static	N/A
Weight	0.67kgs	Standard	ISO22881

* For any deviation between metric and imperial spec, please refer to the metric spec.

Performance

Rolling Smoothness
Max. 5 points Score: 4

Quiet Operation
Max. 5 points Score: 4

Floor Surface Preservation
Max. 5 points Score: 5

Downloads

PDF **1155-EN-KS2026110201.pdf**
Product Data Sheet (Metric)

3D **1155-CN-KS2026110201-d261102101441.rar**
3D drawings are for members only. Please log in to download.

Related Products

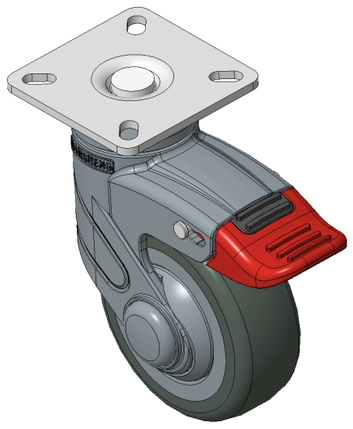

1155 STAT Series Caster Series (All Plastic)

Resolute (blue gray) Wheel Diameter x Wheel Width 75 x 27mm

KS-11550300454033

wheel diameter	dynamic load	overall height
075 mm	75 kg	113 mm

View specs →

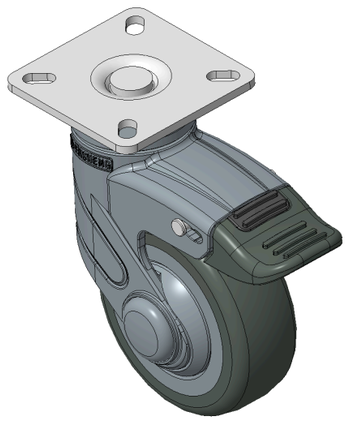

1155 STAT Series Caster Series (All Plastic)

Resolute (blue gray) Wheel Diameter x Wheel Width 75 x 27mm

KS-11550300454043

wheel diameter	dynamic load	overall height
075 mm	75 kg	113 mm

View specs →