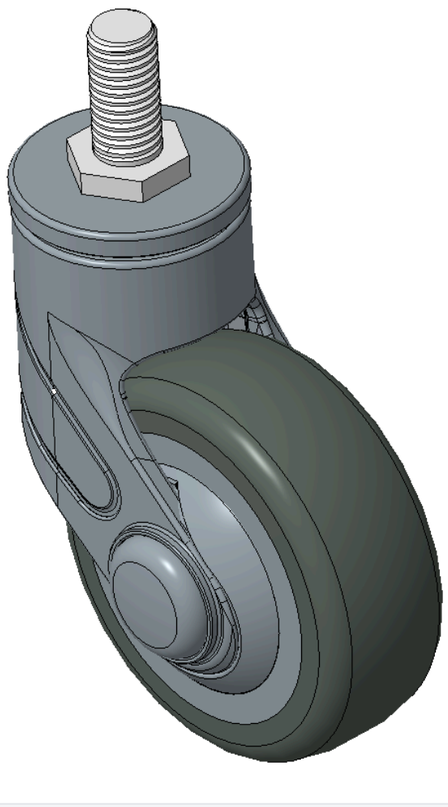

Picture may differ from original product



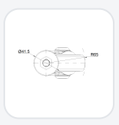

1155 STAT Series Caster Series (All Plastic)

PPR (Blue-Grey) Wheel Diameter × Wheel Width 75 x 27mm

KS-11550300265013 Copy model no.

Wheel Diameter	Load Capacity (Dynamic)	Overall Height	Wheel Bearing
75mm	90kgs	107mm	Wheels With Ball Bearings

- Core locking with blue-gray polyamide legs—M12x25
- Zinc-plated Threaded Stem surface, Mounting Type - Threaded Stem device
- High-Quality Impact-Resistant Polypropylene Wheel Center, High-Quality Reinforced Polypropylene Rubber (TPR) wheel rim
- Dark gray, Bearing—Ball Bearings.
- Wheel tread: Thermoplastic rubber elastomer (TPR)
- Wheel Center: Made of high-quality impact-resistant polypropylene

Product descriptions are for reference only. The actual product shall prevail.

Product Data Sheet (Metric) | 3D Drawing Request

3D drawings are for members only. Please log in to download.

Product Data Sheet

Metric | Imperial

Wheel Diameter	75mm	Wheel Width	27mm
Wheel Bearing	Wheels With Ball Bearings	Threaded Stem	M12
Threaded Length	25mm	Offset	27mm
Swivel Interference	130mm	Overall Height	107mm
Swivel Radius	65mm	Hardness Of Tread	82±5° Shore A
Load Capacity (Dynamic)	90kgs	Load Capacity (Static)	135kgs
Temperature	-20°C to +60°C	Fork Type	Swivel Caster
Stainless	N/A	Electrical Conductivity	N/A
Anti-Static	N/A	Weight	0.49kgs
Standard	ISO22881		

* For any deviation between metric and imperial spec, please refer to the metric spec.

Performance

Rolling Smoothness
Max. 5 points Score: 4

Quiet Operation
Max. 5 points Score: 4

Floor Surface Preservation
Max. 5 points Score: 5

Downloads

PDF **1155-EN-KS2026110207.pdf**
Product Data Sheet (Metric)

3D **1155-CN-KS2026110207-d261102110904.rar**
3D drawings are for members only. Please log in to download.

© 2026 DERSHENG CO., LTD. All rights reserved.