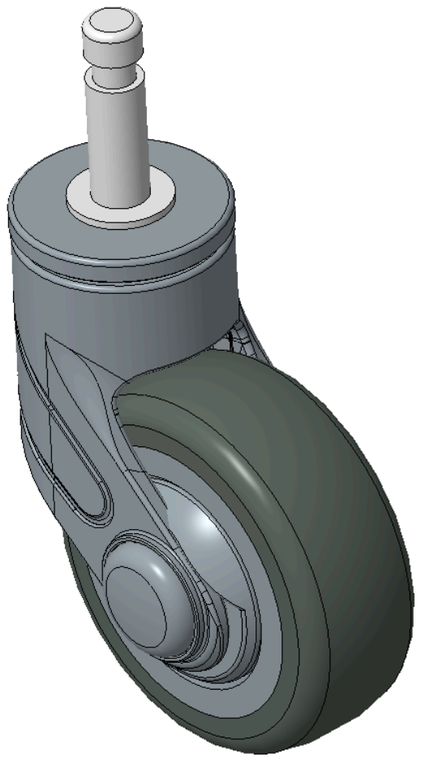

Picture may differ from original product


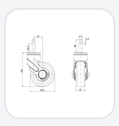
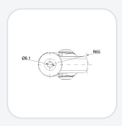

1155 STAT Series Caster Series (All Plastic)

PPR (Blue-Grey) Wheel Diameter × Wheel Width 75 x 27mm

KS-11550300267023 Copy model no.

Wheel Diameter	Load Capacity (Dynamic)	Overall Height	Wheel Bearing
75mm	90kgs	104mm	Wheels With Ball Bearings

- Plug-in type toothed lock with blue-gray Casters, Ø11x38L
- The Fork is made of polyamide reinforced material, plug-in type installation.
- Rust-proof, Corrosion resistant, Attractive appearance, Economical, and Smooth rotation.
- High-Quality Impact-Resistant Polypropylene Wheel Center, High-Quality Reinforced Polypropylene Rubber (TPR) Wheel Tread.
- Dark gray, Bearing—Ball Bearings.
- Wheel tread: Thermoplastic rubber elastomer (TPR)
- Wheel Center: Made of high-quality impact-resistant polypropylene

Product descriptions are for reference only. The actual product shall prevail.

Product Data Sheet (Metric) 3D Drawing Request

3D drawings are for members only. Please log in to download.

Product Data Sheet

Metric Imperial

Wheel Diameter	75mm	Wheel Width	27mm
Wheel Bearing	Wheels With Ball Bearings	Stem Diameter	11mm
Stem Length	38mm	Offset	27mm
Swivel Interference	130mm	Overall Height	104mm
Swivel Radius	65mm	Hardness Of Tread	82±5° Shore A
Load Capacity (Dynamic)	90kgs	Load Capacity (Static)	135kgs
Temperature	-20°C to +60°C	Stainless	N/A
Electrical Conductivity	N/A	Anti-Static	N/A
Weight	0.81kgs	Standard	ISO22883

* For any deviation between metric and imperial spec, please refer to the metric spec.

Performance

Rolling Smoothness
Max. 5 points Score: 4

Quiet Operation
Max. 5 points Score: 4

Floor Surface Preservation
Max. 5 points Score: 5

Downloads

PDF **1155-EN-KS2026110222.pdf**
Product Data Sheet (Metric)

3D **1155-CN-KS2026110222-d261102184624.rar**
3D drawings are for members only. Please log in to download.

© 2026 DERSHENG CO., LTD. All rights reserved.