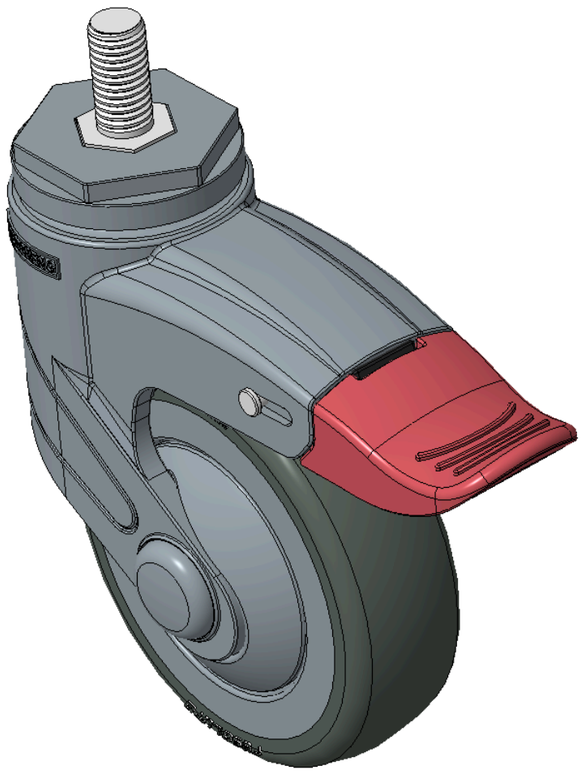

Picture may differ from original product



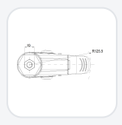

1155 STAT Series Caster Series (All Plastic)

# PPR (Blue-Grey) Wheel Diameter × Wheel Width 100 x 31mm

KS-11550400266053H Copy model no.

| Wheel Diameter | Load Capacity (Dynamic) | Overall Height | Wheel Bearing |
|---|---|---|---|
| 100mm | 90kgs | 139mm | Wheels With Ball Bearings |

- Extra-long double-brake design, toothed With locking system with blue-gray polyamide legs—M12x25
- Zinc-plated Threaded Stem surface, Mounting Type - Threaded Stem device
- High-Quality Impact-Resistant Polypropylene Wheel Center, High-Quality Reinforced Polypropylene Rubber (TPR) wheel rim
- Dark gray, Bearing—Ball Bearings.
- Wheel tread: Thermoplastic rubber elastomer (TPR)
- Wheel Center: Made of high-quality impact-resistant polypropylene

Product descriptions are for reference only. The actual product shall prevail.

Product Data Sheet (Metric) | 3D Drawing Request

3D drawings are for members only. Please log in to download.

## Product Data Sheet

Metric | Imperial

| | | | |
|---|---|---|---|
| Wheel Diameter | 100mm | Wheel Width | 31mm |
| Wheel Bearing | Wheels With Ball Bearings | Threaded Stem | M12×P1.75 |
| Threaded Length | 25mm | Offset | 36mm |
| Swivel Interference | 251mm | Overall Height | 139mm |
| Swivel Radius | 125.5mm | Hardness Of Tread | 82±5° Shore A |
| Load Capacity (Dynamic) | 90kgs | Load Capacity (Static) | 135kgs |
| Temperature | -20°C to +60°C | Fork Type | Swivel Caster |
| Stainless | N/A | Electrical Conductivity | N/A |
| Anti-Static | N/A | Weight | 0.49kgs |
| Standard | ISO22881 | | |

* For any deviation between metric and imperial spec, please refer to the metric spec.

## Performance

**Rolling Smoothness**
Max. 5 points Score: 4

**Quiet Operation**
Max. 5 points Score: 4

**Floor Surface Preservation**
Max. 5 points Score: 5

## Downloads

PDF **1155-EN-KS2026110703.pdf**
Product Data Sheet (Metric)

3D **1155-CN-KS2026110703-d261107085419.rar**
3D drawings are for members only. Please log in to download.

## Related Products

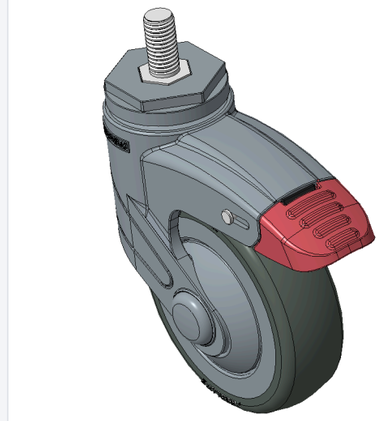

1155 STAT Series Caster Series (All Plastic)
**PPR (Blue-Grey) Wheel Diameter × Wheel Width 100 x 31mm**
KS-11550400266053

| wheel diameter | dynamic load | overall height |
|---|---|---|
| 100 mm | 90 kg | 139 mm |

View specs →

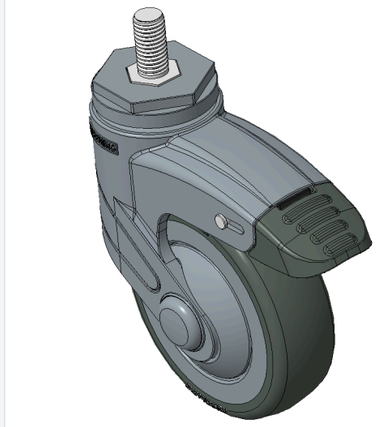

1155 STAT Series Caster Series (All Plastic)
**PPR (Blue-Grey) Wheel Diameter × Wheel Width 100 x 31mm**
KS-11550400266093

| wheel diameter | dynamic load | overall height |
|---|---|---|
| 100 mm | 90 kg | 139 mm |

View specs →

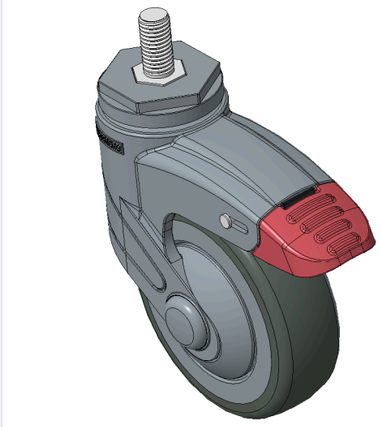

1155 STAT Series Caster Series (All Plastic)
**PPR (Blue-Grey) Wheel Diameter × Wheel Width 100 x 31mm**
KS-11550400266413

| wheel diameter | dynamic load | overall height |
|---|---|---|
| 100 mm | 90 kg | 139 mm |

View specs →

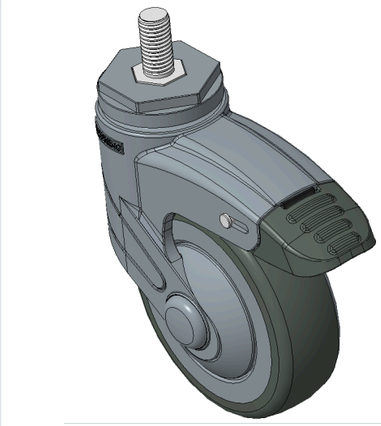

1155 STAT Series Caster Series (All Plastic)
**PPR (Blue-Grey) Wheel Diameter × Wheel Width 100 x 31mm**
KS-11550400266433

| wheel diameter | dynamic load | overall height |
|---|---|---|
| 100 mm | 90 kg | 139 mm |

View specs →