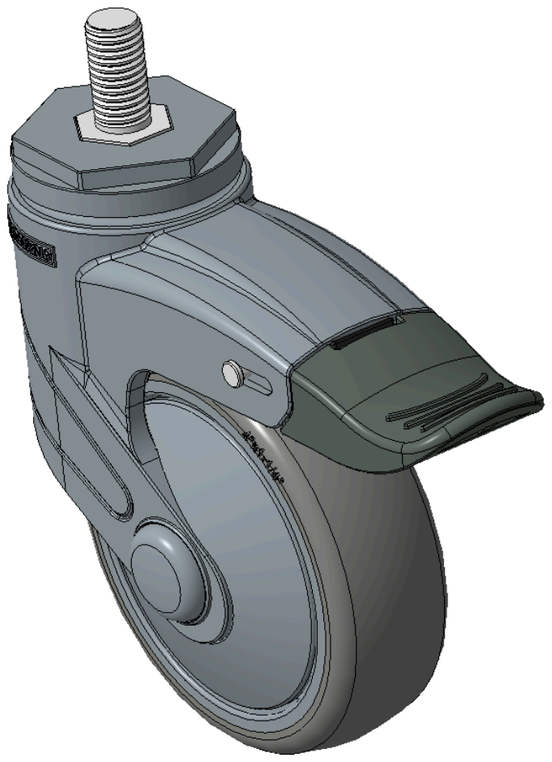

Picture may differ from original product





1155 STAT Series Caster Series (All Plastic)

Classic PPR Wheel (Pearlescent Dark Gray) Wheel Diameter×Wheel Width 100×31mm

KS-11550402266033H Copy model no.

Wheel Diameter	Load Capacity (Dynamic)	Overall Height	Wheel Bearing
100mm	80kgs	139mm	Wheels With Ball Bearings

- Casters with a long double-lock system, Threaded Stem M12x25
- Pearlescent Casters with polyamide reinforcement, Threaded Stem installation
- Rust-proof, Corrosion resistant, Attractive appearance, Economical, and Smooth rotation
- High-Quality Impact-Resistant Polypropylene Wheel Center, High-Quality Reinforced Polypropylene Rubber (TPR) Wheel Tread
- Dark gray, Bearing—Ball Bearings
- Wheel tread: Thermoplastic rubber elastomer (TPR)
- Wheel Center: Made of high-quality impact-resistant polypropylene

Product descriptions are for reference only. The actual product shall prevail.

3D Drawing Request

3D drawings are for members only. Please log in to download.

Product Data Sheet

Metric | Imperial

Wheel Diameter	100mm	Wheel Width	31mm
Wheel Bearing	Wheels With Ball Bearings	Threaded Stem	M12×P1.75
Threaded Length	25mm	Offset	36mm
Swivel Interference	251mm	Overall Height	139mm
Swivel Radius	125.5mm	Hardness Of Tread	82±5° Shore A
Load Capacity (Dynamic)	80kgs	Load Capacity (Static)	90kgs
Temperature	-20°C to +60°C	Fork Type	Swivel Caster With Total Brake
Stainless	N/A	Electrical Conductivity	N/A
Anti-Static	N/A	Weight	0.63kgs
Standard	ISO22881		

* For any deviation between metric and imperial spec, please refer to the metric spec.

Performance

Rolling Smoothness
Max. 5 points Score: 4

Quiet Operation
Max. 5 points Score: 4

Floor Surface Preservation
Max. 5 points Score: 5

Downloads

3D **1155-CN-KS2026111417-d261114140134.rar**
3D drawings are for members only. Please log in to download. ›

Related Products

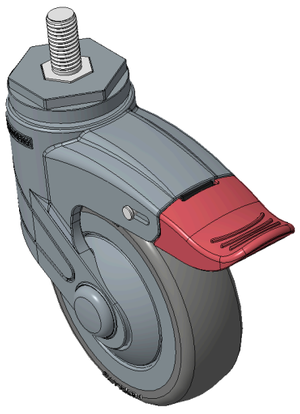

1155 STAT Series Caster Series (All Plastic)

Classic PPR Wheel (Pearlescent Dark Gray) Wheel Diameter×Whe…

KS-11550402266013H

wheel diameter	dynamic load	overall height
100 mm	80 kg	139 mm

View specs →