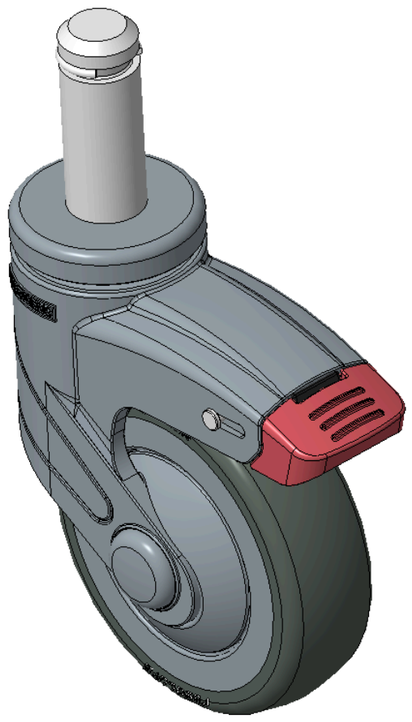

Picture may differ from original product





1155 STAT Series Caster Series (All Plastic)

PPR (Blue-Grey) Wheel Diameter × Wheel Width 100 x 31mm

KS-11550400268013 Copy model no.

Wheel Diameter	Load Capacity (Dynamic)	Overall Height	Wheel Bearing
100mm	90kgs	139mm	Wheels With Ball Bearings

- Short double-brake With locking system Casters, pin rivets—Ø21.6x56L
- Blue-gray legs made of polyamide reinforcement, pin-mounted installation
- Rust-proof, Corrosion resistant, Attractive appearance, Economical, and Smooth rotation
- High-Quality Impact-Resistant Polypropylene Wheel Center, High-Quality Reinforced Polypropylene Rubber (TPR) Wheel Tread
- Dark gray, Bearing—Ball Bearings
- Wheel tread: Thermoplastic rubber elastomer (TPR)
- Wheel Center: Made of high-quality impact-resistant polypropylene

Product descriptions are for reference only. The actual product shall prevail.

3D Drawing Request

3D drawings are for members only. Please log in to download.

Product Data Sheet

Metric | Imperial

Wheel Diameter	100mm	Wheel Width	31mm
Wheel Bearing	Wheels With Ball Bearings	Stem Diameter	21.6mm
Stem Length	56mm	Offset	36mm
Swivel Interference	201mm	Overall Height	139mm
Swivel Radius	100.5mm	Hardness Of Tread	82±5° Shore A
Load Capacity (Dynamic)	90kgs	Load Capacity (Static)	135kgs
Temperature	-20°C to +60°C	Fork Type	Swivel Caster With Total Brake
Stainless	N/A	Electrical Conductivity	N/A
Anti-Static	N/A	Weight	0.64kgs
Standard	ISO22881		

* For any deviation between metric and imperial spec, please refer to the metric spec.

Performance

Rolling Smoothness
Max. 5 points Score: 4

Quiet Operation
Max. 5 points Score: 4

Floor Surface Preservation
Max. 5 points Score: 5

Downloads

3D **1155-CN-KS2026111613-d261116163753.rar**
3D drawings are for members only. Please log in to download.

© 2026 DERSHENG CO., LTD. All rights reserved.