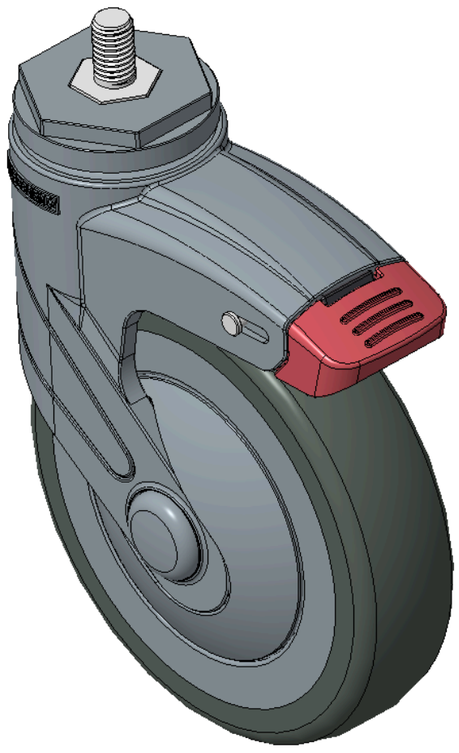

Picture may differ from original product



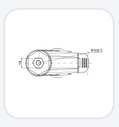

1155 STAT Series Caster Series (All Plastic)

Resolute (blue gray) Wheel Diameter × Wheel Width 125 x 31mm

KS-11550500456023 Copy model no.

Wheel Diameter	Load Capacity (Dynamic)	Overall Height	Wheel Bearing
125mm	100kgs	164mm	Wheels With Ball Bearings

- Short double-brake With locking system Casters, Threaded Stem M10x17
- Blue-gray legs made of polyamide reinforcement, Threaded Stem installation
- Rust-proof, Corrosion resistant, Attractive appearance, Economical, and Smooth rotation
- High-Quality Impact-Resistant Polypropylene Wheel Center, High-Quality Reinforced Polypropylene Rubber (TPR) Wheel Tread
- Dark gray, Bearing—Ball Bearings
- Wheel tread: Thermoplastic rubber elastomer (TPR)
- Wheel Center: Made of high-quality impact-resistant polypropylene

Product descriptions are for reference only. The actual product shall prevail.

3D Drawing Request

3D drawings are for members only. Please log in to download.

Product Data Sheet

Metric | Imperial

Wheel Diameter	**125mm**	Wheel Width	**31mm**
Wheel Bearing	**Wheels With Ball Bearings**	Threaded Stem	**M10×P1.5**
Threaded Length	**17mm**	Offset	**38mm**
Swivel Interference	**201mm**	Overall Height	**164mm**
Swivel Radius	**100.5mm**	Hardness Of Tread	**72±5° Shore A**
Load Capacity (Dynamic)	**100kgs**	Load Capacity (Static)	**135kgs**
Temperature	**-20°C to +60°C**	Fork Type	**Swivel Caster With Total Brake**
Stainless	**N/A**	Electrical Conductivity	**N/A**
Anti-Static	**N/A**	Weight	**0.64kgs**
Standard	**ISO22881**		

* For any deviation between metric and imperial spec, please refer to the metric spec.

Performance

Rolling Smoothness
Max. 5 points Score: 5

Quiet Operation
Max. 5 points Score: 5

Floor Surface Preservation
Max. 5 points Score: 5

Downloads

3D **1155-CN-KS2026111725-d261117134756.rar**
3D drawings are for members only. Please log in to download.

© 2026 DERSHENG CO., LTD. All rights reserved.