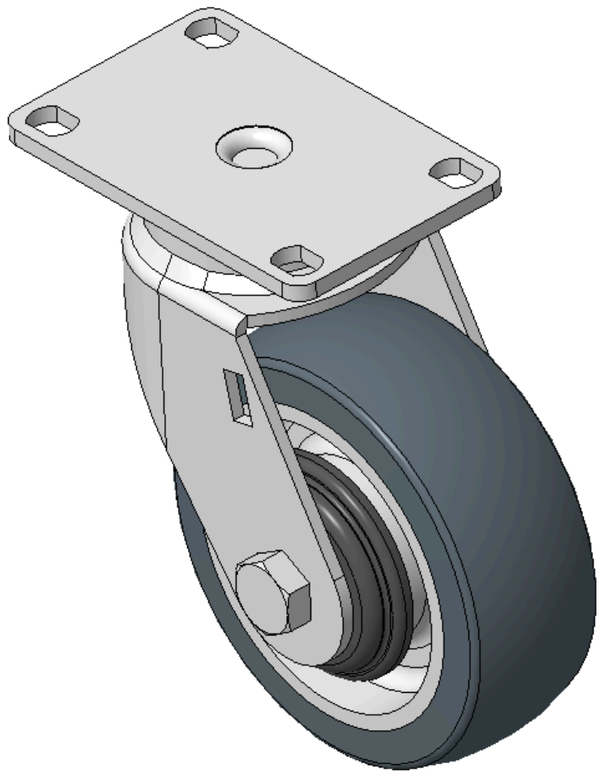

Picture may differ from original product



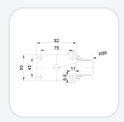

1165-3 AMR/AGV-3 Double Precision Ball Bearing Caster (Medium Duty) Series

AQPU (grey) wheel Diameter × Wheel Width 100 x 36mm

KS-11650403602023 Copy model no.

Wheel Diameter	Load Capacity (Dynamic)	Overall Height	Wheel Bearing
100mm	200kgs	130mm	Wheels With Ball Bearings

- Portable Casters, Welded Caster Fork, Zine-Plated finish
- Base plate Mounting Type device, 75x45mm Bolt Hole Spacing
- Aluminum wheel center, High Quality Polyurethane Wheel Tread, gray
- Bearings—Ball Bearings
- Wheel Tread: Hhigh-Quality Polyurethane
- Wheel Center: Aluminum core

Product descriptions are for reference only. The actual product shall prevail.

Product Data Sheet (Metric) | 3D Drawing Request

3D drawings are for members only. Please log in to download.

Product Data Sheet

Metric | Imperial

Wheel Diameter	100mm	Wheel Width	36mm
Wheel Bearing	Wheels With Ball Bearings	Plate Size	92 x 60mm
Bolt Hole Spacing	75 x 45mm	Plate Hole	11 x 8.6mm
Offset	35mm	Swivel Interference	172mm
Overall Height	130mm	Swivel Radius	86mm
Hardness Of Tread	77±5° Shore A	Load Capacity (Dynamic)	200kgs
Load Capacity (Static)	300kgs	Temperature	-20°C to +70°C
Fork Type	Swivel Caster	Stainless	N/A
Electrical Conductivity	N/A	Anti-Static	N/A
Weight	1.03kgs	Standard	ISO22883

* For any deviation between metric and imperial spec, please refer to the metric spec.

Performance

Rolling Smoothness
Max. 5 points Score: 5

Quiet Operation
Max. 5 points Score: 5

Floor Surface Preservation
Max. 5 points Score: 5

Downloads

PDF **1165-EN-KS2025071641.pdf**
Product Data Sheet (Metric)

3D **KS-11650403602023.zip**
3D drawings are for members only. Please log in to download.

© 2026 DERSHENG CO., LTD. All rights reserved.