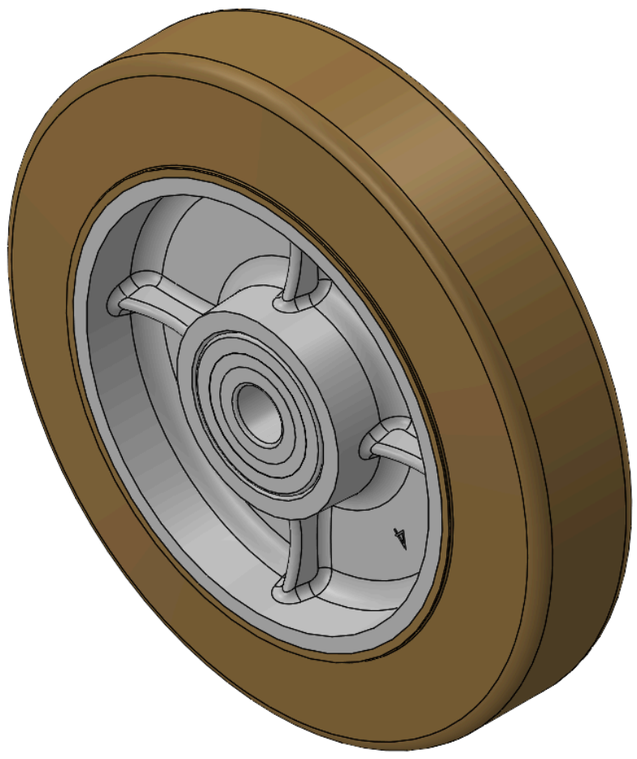

Picture may differ from original product



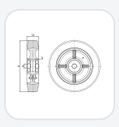

NMBR Series

Wheel Diameter × Wheel Width 200 x 46mm

YJ-12041108186571 Copy model no.

Wheel Diameter(D)	Load Capacity (Dynamic)	Wheel Bearing
200mm	**400kgs**	**Ball Bearing**

- Made from High-Quality, elastic, non-greasy, environmentally friendly rubber.
- Features high Resilient, providing excellent Floor Surface Preservation, Shock-Absorbing, and noise reduction.
- The non-greasy rubber Non-Markings when walked on.
- Suitable for any surface.
- Rubber natural color.
- Wheel Center: cast iron core
- Outer packaging: rubber
- Bearing: Ball bearing

Product descriptions are for reference only. The actual product shall prevail.

3D Drawing Request

3D drawings are for members only. Please log in to download.

Product Data Sheet

Metric | Imperial

Wheel Diameter(D)	**200mm**	Wheel Width(T2)	**46mm**
Wheel Bearing	**Ball Bearing**	Axle Bore(d)	**17mm**
Axle Bore(S)	**mm**	Bearing Bore Depth(t)	
Hub Lenth(T1)	**46mm**	Hardness Of Tread	**60±5° Shore A**
Load Capacity (Dynamic)	**400kgs**	Load Capacity (Static)	**600kgs**
Temperature	**-20°C to +80°C**	Electrical Conductivity	**N/A**
Anti-Static	**N/A**	Weight	**2.81kgs**
Standard	**ISO22883**		

* For any deviation between metric and imperial spec, please refer to the metric spec.

Performance

Rolling Smoothness
Max. 5 points Score: 3

Quiet Operation
Max. 5 points Score: 4

Floor Surface Preservation
Max. 5 points Score: 4

Downloads

3D **1204-CN-YJ2026111004-d261110163538.rar**
3D drawings are for members only. Please log in to download.

© 2026 DERSHENG CO., LTD. All rights reserved.