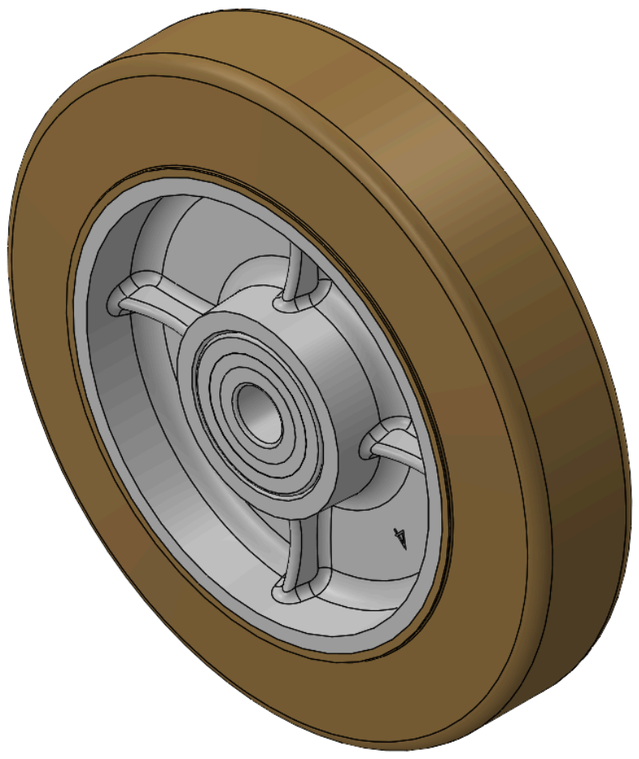

Picture may differ from original product


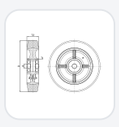

NMBR Series

# Wheel Diameter × Wheel Width 200 x 46mm

YJ-12041108186571 Copy model no.

| Wheel Diameter(D) | Load Capacity (Dynamic) | Wheel Bearing |
|---|---|---|
| **200mm** | **400kgs** | **Ball Bearing** |

- Made from High-Quality, elastic, non-greasy, environmentally friendly rubber.
- Features high Resilient, providing excellent Floor Surface Preservation, Shock-Absorbing, and noise reduction.
- The non-greasy rubber Non-Markings when walked on.
- Suitable for any surface.
- Rubber natural color.
- Wheel Center: cast iron core
- Outer packaging: rubber
- Bearing: Ball bearing

Product descriptions are for reference only. The actual product shall prevail.

Product Data Sheet | 3D Drawing Request

3D drawings are for members only. Please log in to download.

## Product Data Sheet

Metric | Imperial

| | | | |
|---|---|---|---|
| Wheel Diameter(D) | **200mm** | Wheel Width(T2) | **46mm** |
| Wheel Bearing | **Ball Bearing** | Axle Bore(d) | **17mm** |
| Axle Bore(S) | **mm** | Bearing Bore Depth(t) | |
| Hub Lenth(T1) | **46mm** | Hardness Of Tread | **60±5° Shore A** |
| Load Capacity (Dynamic) | **400kgs** | Load Capacity (Static) | **600kgs** |
| Temperature | **-20°C to +80°C** | Electrical Conductivity | **N/A** |
| Anti-Static | **N/A** | Weight | **2.81kgs** |
| Standard | **ISO22883** | | |

* For any deviation between metric and imperial spec, please refer to the metric spec.

## Performance

**Rolling Smoothness**
Max. 5 points Score: 3

**Quiet Operation**
Max. 5 points Score: 4

**Floor Surface Preservation**
Max. 5 points Score: 4

## Downloads

PDF **1204-EN-YJ2026111004.pdf**
Product Data Sheet

3D **1204-CN-YJ2026111004-d261110163538.rar**
3D drawings are for members only. Please log in to download.



© 2026 DERSHENG CO., LTD. All rights reserved.