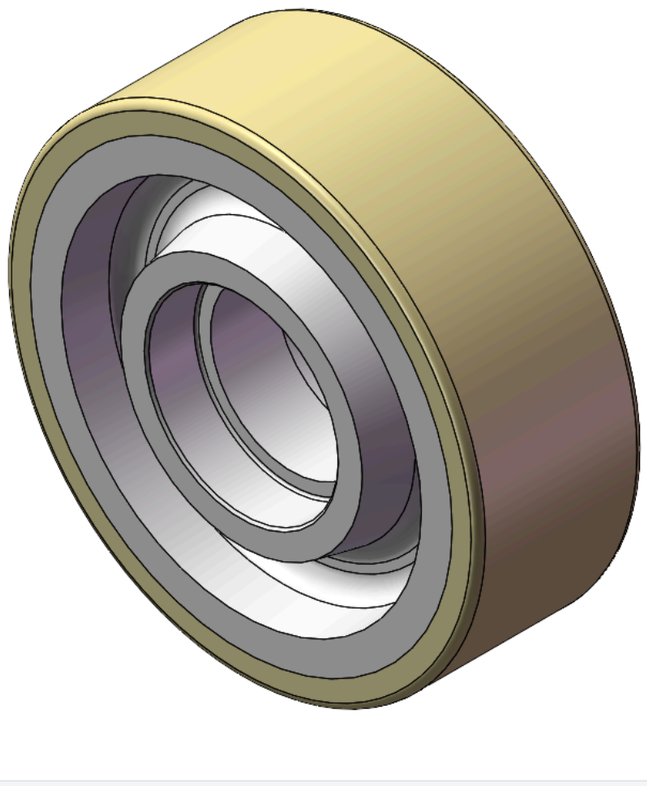

Picture may differ from original product




AGPU Series

Wheel Diameter × Wheel Width 200 x 70mm

YJ-12033508280114 Copy model no.

Wheel Diameter(D)	Load Capacity (Dynamic)	Wheel Bearing
200mm	**1100kgs**	**Without Bearing**

- It possesses excellent dynamic performance, superior tear strength, and exceptional toughness.
- It also exhibits very good abrasion resistance, high Resilient, high load-bearing capacity and mechanical strength, and impact resistance without deformation.
- Suitable for Forklift Trucks, Electric Stackers, Heavy duty machines, AGVs, and in the industrial and amusement sectors.
- GPU True Colors
- Wheel Center: Aluminum core
- Wheel Tread: High-quality polyurethane
- Bearings: —

Product descriptions are for reference only. The actual product shall prevail.

3D Drawing Request

3D drawings are for members only. Please log in to download.

Product Data Sheet

Metric | Imperial

Wheel Diameter(D)	**200mm**	Wheel Width(T2)	**70mm**
Wheel Bearing	**Without Bearing**	Axle Bore(d)	**—**
Axle Bore(S)	**80mm**	Bearing Bore Depth(t)	**21mm**
Hub Lenth(T1)	**70mm**	Hardness Of Tread	**95±5° Shore A**
Load Capacity (Dynamic)	**1100kgs**	Load Capacity (Static)	**1650kgs**
Temperature	**-20°C to +70°C**	Electrical Conductivity	**N/A**
Anti-Static	**N/A**	Weight	**3.31kgs**
Standard	**ISO22883**		

* For any deviation between metric and imperial spec, please refer to the metric spec.

Performance

Rolling Smoothness
Max. 5 points Score: 5

Quiet Operation
Max. 5 points Score: 3

Floor Surface Preservation
Max. 5 points Score: 5

Downloads

3D **1235-CN-YJ2026111701-d261117083516.rar**
3D drawings are for members only. Please log in to download.

© 2026 DERSHENG CO., LTD. All rights reserved.