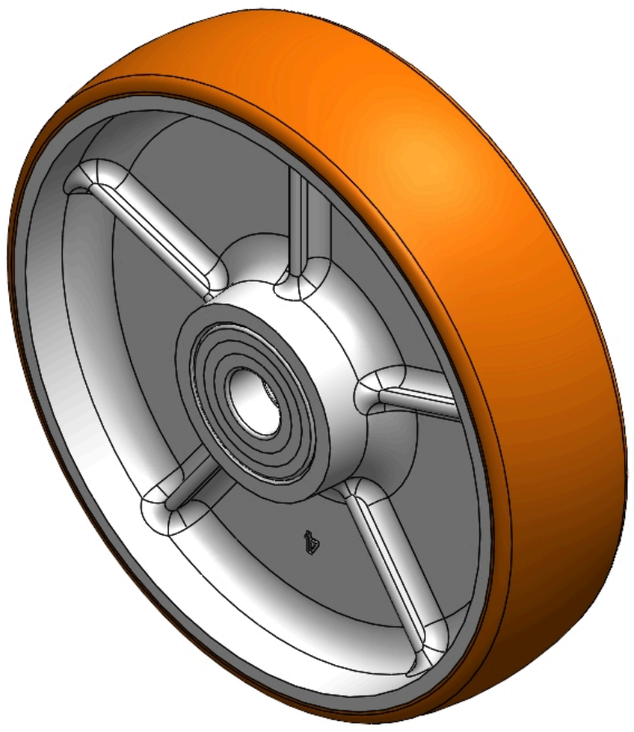

Picture may differ from original product


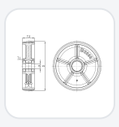

QPU Series

Wheel Diameter × Wheel Width 200 × 50 mm

YJ-12035308206297 Copy model no.

Wheel Diameter(D)	Load Capacity (Dynamic)	Wheel Bearing
200mm	**900kgs**	**Ball Bearing**

- It has good elasticity, reduces pushing resistance, improves machine tool operability, and has good wear resistance.
- It has excellent Hydrolysis Resistance.
- Suitable for tropical regions and humid working environments.
- QPU, brown, Wheel Tread profile: Crown
- Wheel Center: cast iron core
- Wheel Tread: High-quality polyurethane
- Bearing: Ball bearing

Product descriptions are for reference only. The actual product shall prevail.

3D Drawing Request

3D drawings are for members only. Please log in to download.

Product Data Sheet

Metric | Imperial

Wheel Diameter(D)	**200mm**	Wheel Width(T2)	**50mm**
Wheel Bearing	**Ball Bearing**	Axle Bore(d)	**20mm**
Axle Bore(S)	—	Bearing Bore Depth(t)	—
Hub Lenth(T1)	**50mm**	Hardness Of Tread	**92±5° Shore A**
Load Capacity (Dynamic)	**900kgs**	Load Capacity (Static)	**1350kgs**
Temperature	**-20°C to +70°C**	Electrical Conductivity	**N/A**
Anti-Static	**N/A**	Weight	**3.10kgs**
Standard	**ISO22883**		

* For any deviation between metric and imperial spec, please refer to the metric spec.

Performance

Rolling Smoothness
Max. 5 points Score: 5

Quiet Operation
Max. 5 points Score: 5

Floor Surface Preservation
Max. 5 points Score: 5

Downloads

3D **1253-CN-YJ2026111001-d261110133557.rar**
3D drawings are for members only. Please log in to download.

© 2026 DERSHENG CO., LTD. All rights reserved.