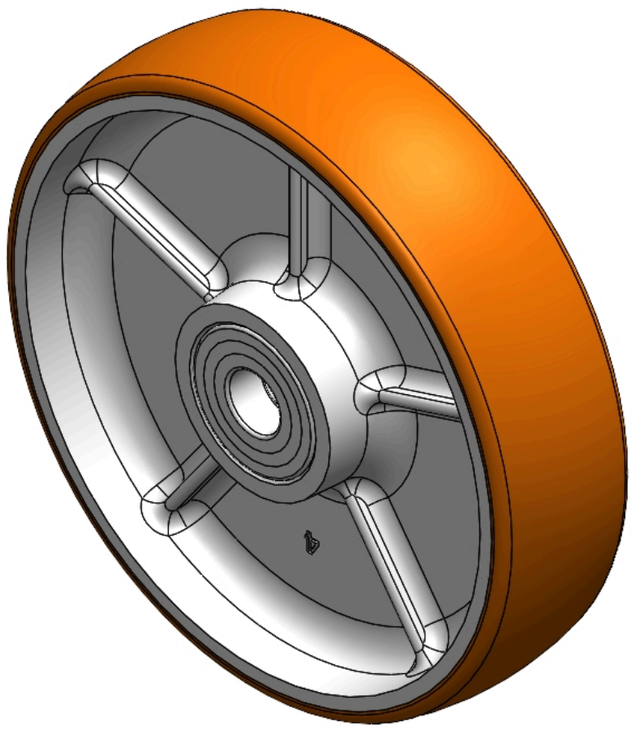

Picture may differ from original product


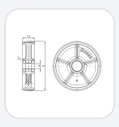

QPU Series

Wheel Diameter × Wheel Width 200 × 50 mm

YJ-12035308206297 Copy model no.

Wheel Diameter(D)	Load Capacity (Dynamic)	Wheel Bearing
200mm	**900kgs**	**Ball Bearing**

- It has good elasticity, reduces pushing resistance, improves machine tool operability, and has good wear resistance.
- It has excellent Hydrolysis Resistance.
- Suitable for tropical regions and humid working environments.
- QPU, brown, Wheel Tread profile: Crown
- Wheel Center: cast iron core
- Wheel Tread: High-quality polyurethane
- Bearing: Ball bearing

Product descriptions are for reference only. The actual product shall prevail.

Product Data Sheet | 3D Drawing Request

3D drawings are for members only. Please log in to download.

Product Data Sheet

Metric | Imperial

Wheel Diameter(D)	**200mm**	Wheel Width(T2)	**50mm**
Wheel Bearing	**Ball Bearing**	Axle Bore(d)	**20mm**
Axle Bore(S)	—	Bearing Bore Depth(t)	—
Hub Lenth(T1)	**50mm**	Hardness Of Tread	**92±5° Shore A**
Load Capacity (Dynamic)	**900kgs**	Load Capacity (Static)	**1350kgs**
Temperature	**-20°C to +70°C**	Electrical Conductivity	**N/A**
Anti-Static	**N/A**	Weight	**3.10kgs**
Standard	**ISO22883**		

* For any deviation between metric and imperial spec, please refer to the metric spec.

Performance

Rolling Smoothness
Max. 5 points Score: 5

Quiet Operation
Max. 5 points Score: 5

Floor Surface Preservation
Max. 5 points Score: 5

Downloads

PDF **1253-EN-YJ2026111001.pdf**
Product Data Sheet

3D **1253-CN-YJ2026111001-d261110133557.rar**
3D drawings are for members only. Please log in to download.

© 2026 DERSHENG CO., LTD. All rights reserved.