1102 B Type Caster Series

QPU (brown round) Wheel Diameter × Wheel Width 100 x 34mm

EAN

KS-11020400531121

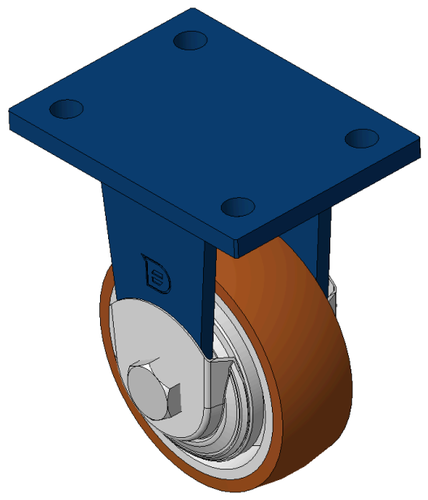

Picture may differ from original product

Drawings are for reference only and may differ from the product

Technical Data

◉ Imperial ○ Metric

Wheel Diameter	4 "
Wheel Width	1-3/8 "
Wheel Bearing	Wheels With Ball Bearings
Plate Size	4-13/16 " x 3-9/16 "
Bolt Hole Spacing	3-9/16 " x 2-7/16 "
Plate Hole	1/2 "
Overall Height	5-7/8 "
Hardness Of Tread	92±5° Shore A
Load Capacity (Dynamic)	739lbs
Load Capacity (Static)	1108lbs
Temperature	-4°F to +158°F
Fork Type	Rigid Caster
Stainless	N/A
Electrical Conductivity	N/A
Anti-Static	N/A
Weight	4.6lbs
Standard	ISO22883

Advantages at a glance

Rolling Resistance	●●●●●
Operating Noise	●●●●●
Floor Surface Preservation	●●●●●

Dimensions

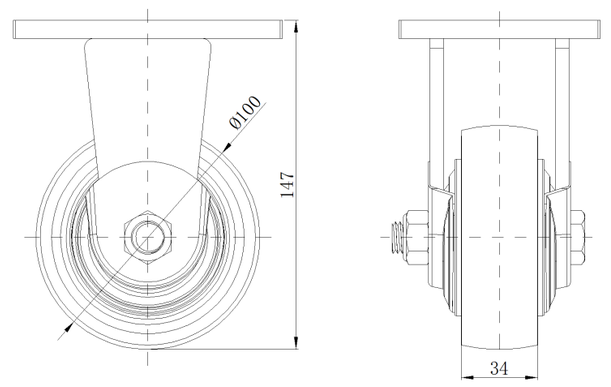

Mounting

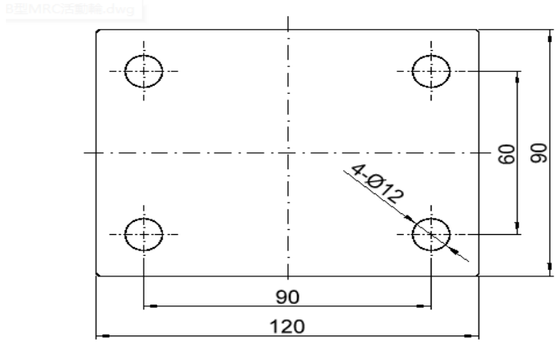

* For any deviation between metric and imperial spec, please refer to the metric spec.

© Copyright 2026 DershengInternational www.dersheng.com