Product Data Sheet

1102 B Type Caster Series

Non-marking NBR Rubber (milling) Wheel Diameter x Wheel Width 250 x 63mm

EAN

KS-11021000044031

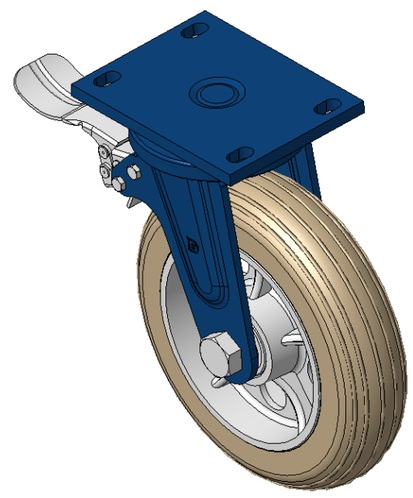

Picture may differ from original product

Casters with rear brake and With locking system, Welded Caster Fork Blue-painted finish, Mounting Type - Top Plate, 140x85 Bolt Hole Spacing Cast Iron Wheel Center, High-Quality, highly Resilient Rubber Wheel Tread, Cast Iron in natural color Bearings—Ball Bearings

Wheel surface: Made of high-quality and highly elastic rubber

Wheel Center: iron core/cast iron core

Drawings are for reference only and may differ from the product

Technical Data

◉ Metric ○ Imperial

Wheel Diameter	250mm
Wheel Width	63mm
Wheel Bearing	Wheels With Ball Bearings
Plate Size	167 x 130mm
Bolt Hole Spacing	140x85mm
Plate Hole	22 x 13mm
Offset	46mm
Swivel Interference	351mm
Overall Height	305mm
Swivel Radius	175.5mm
Hardness Of Tread	85±5° Shore A
Load Capacity (Dynamic)	400kgs
Load Capacity (Static)	600kgs
Temperature	-20°C to +80°C
Fork Type	Swivel Caster With Rear Brake
Stainless	N/A
Electrical Conductivity	N/A
Anti-Static	N/A
Weight	10.77kgs
Standard	ISO22883

Advantages at a glance

Rolling Resistance	● ● ● ○ ○
Operating Noise	● ● ● ● ○
Floor Surface Preservation	● ● ● ● ○

Dimensions

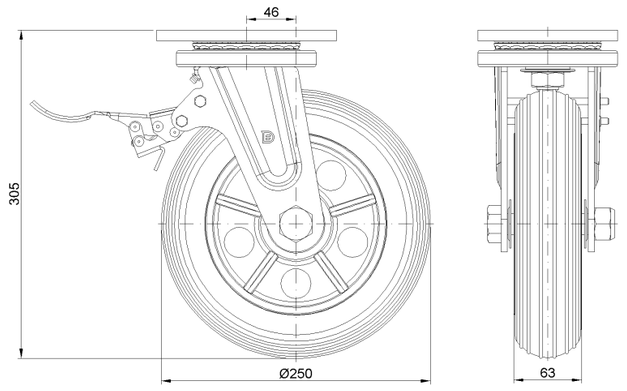

Mounting

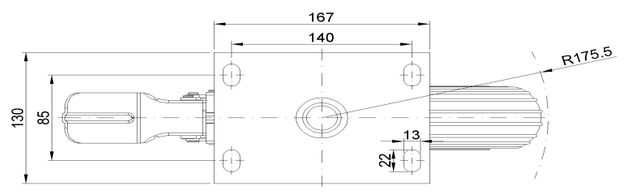

* For any deviation between metric and imperial spec, please refer to the metric spec.

© Copyright 2025 DershengInternational www.dersheng.com