1110-3 Series — Medi Series

PPR Wheel Insert (White Dark Gray) Wheel Diameter×Wheel Width 75×12（50.5）mm

EAN

KS-11100302262023

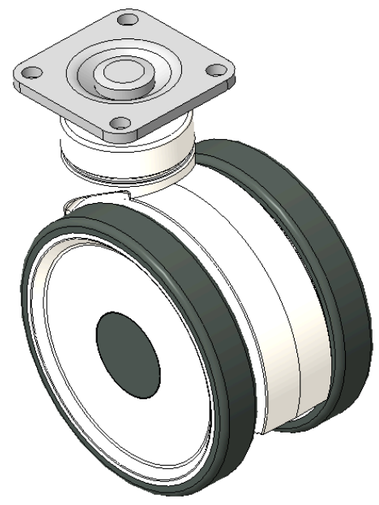

Picture may differ from original product

Drawings are for reference only and may differ from the product

Technical Data

◉ Metric ○ Imperial

Wheel Diameter	75mm
Wheel Width	50.5mm
Wheel Bearing	Wheel With Plain Bearing
Plate Size	42 x 42mm
Bolt Hole Spacing	32x32mm
Plate Hole	5mm
Offset	22mm
Swivel Interference	132mm
Overall Height	100mm
Swivel Radius	66mm
Hardness Of Tread	82±5° Shore A
Load Capacity (Dynamic)	30kgs
Load Capacity (Static)	45kgs
Temperature	-20°C to +60°C
Fork Type	Swivel Caster
Stainless	N/A
Electrical Conductivity	N/A
Anti-Static	N/A
Weight	0.23kgs
Standard	ISO22881

Advantages at a glance

Rolling Resistance	●●●●○
Operating Noise	●●●●○
Floor Surface Preservation	●●●●●

Dimensions

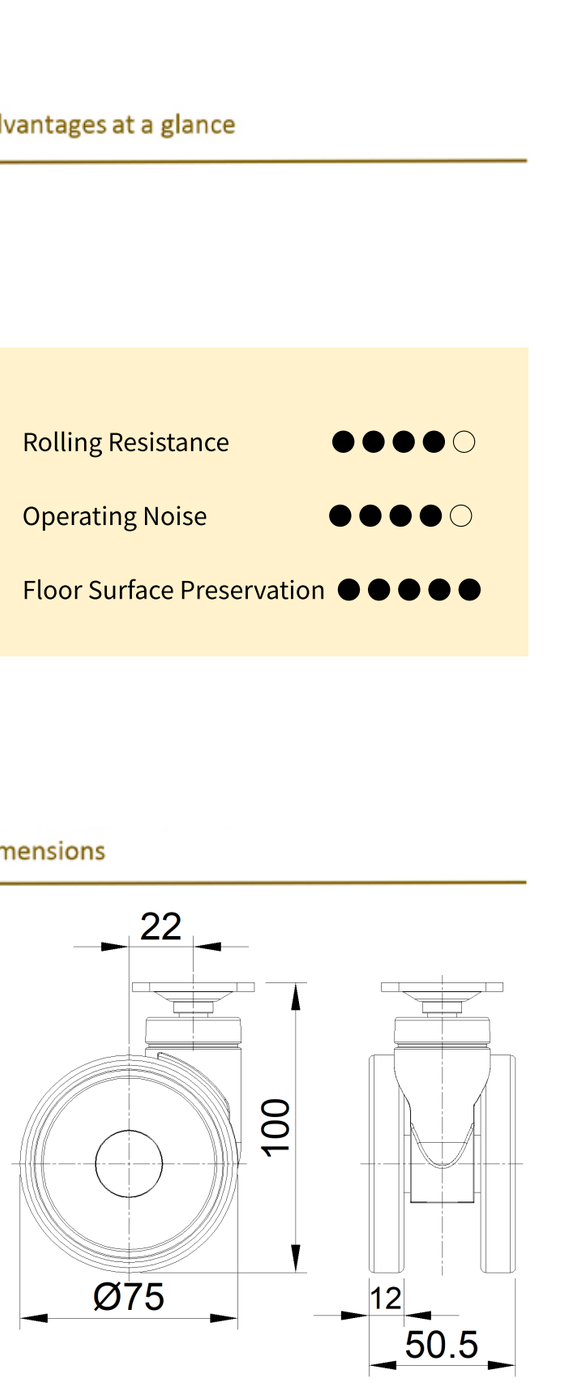

Mounting

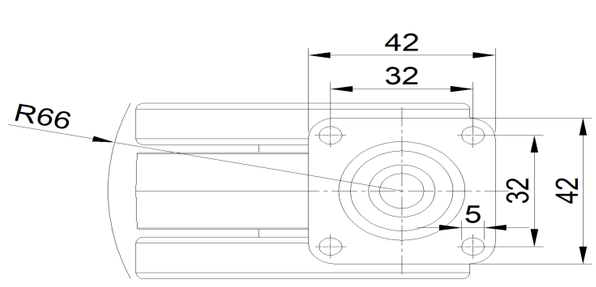

* For any deviation between metric and imperial spec, please refer to the metric spec.

© Copyright 2026 DershengInternational www.dersheng.com