1110-3 Series — Medi Series

PPR Wheel Insert (White Dark Gray) Wheel Diameter×Wheel Width 75×12（50.5）mm

EAN

KS-11100302265033

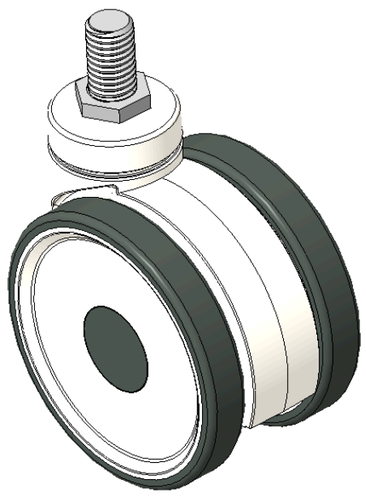

Picture may differ from original product

Drawings are for reference only and may differ from the product

Technical Data

◉ Imperial ○ Metric

Wheel Diameter	3 "
Wheel Width	2 "
Wheel Bearing	Wheel With Plain Bearing
Threaded Stem	M12
Threaded Length	13/16 "
Offset	7/8 "
Swivel Interference	5-1/4 "
Overall Height	3-11/16 "
Swivel Radius	2-5/8 "
Hardness Of Tread	82±5° Shore A
Load Capacity (Dynamic)	66lbs
Load Capacity (Static)	99lbs
Temperature	-4°F to +140°F
Fork Type	Swivel Caster
Stainless	N/A
Electrical Conductivity	N/A
Anti-Static	N/A
Weight	0.4lbs
Standard	ISO22881

Advantages at a glance

Rolling Resistance	●●●●○
Operating Noise	●●●●○
Floor Surface Preservation	●●●●●

Dimensions

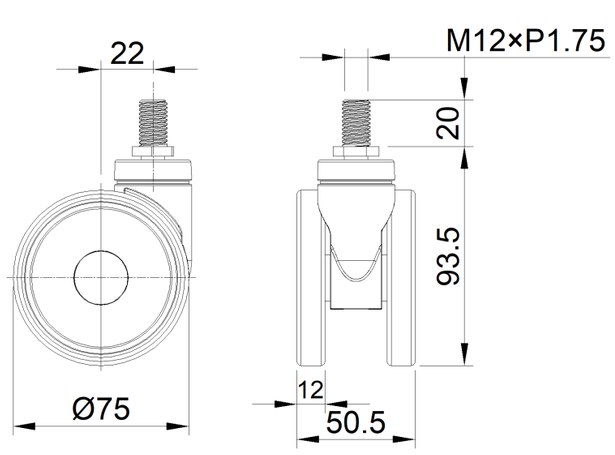

Mounting

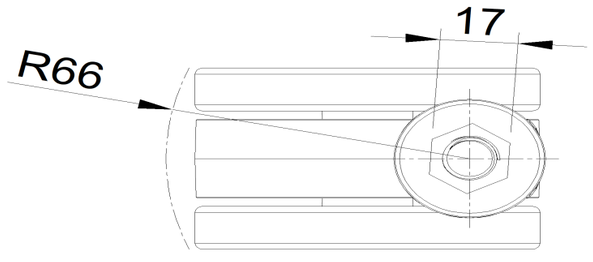

* For any deviation between metric and imperial spec, please refer to the metric spec.

© Copyright 2026 DershengInternational www.dersheng.com