Product Data Sheet

1112-1 2" Wide General Purposes Caster Series

QPU (Brown round) Wheel Diameter × Wheel Width 125 x 40mm

A

KS-11120500531113

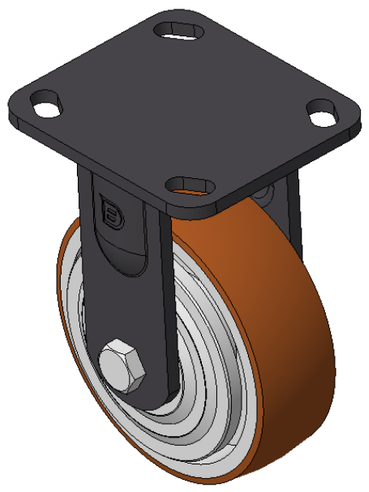

Picture may differ from original product

Rigid Casters, Welded Caster Fork, black paint finish. Base plate Mounting Type device, 85x70mm Bolt Hole Spacing. Cast Iron Wheel Center, High Quality Polyurethane Wheel Tread, Cast Iron brown. Bearings—Ball Bearings, with iron caps.

Wheel Tread: Hhigh-Quality Polyurethane

Wheel Center: Iron core / Cast iron core

Drawings are for reference only and may differ from the product

Technical Data

◉ Metric ○ Imperial

Wheel Diameter	125mm
Wheel Width	40mm
Wheel Bearing	Wheels With Ball Bearings
Plate Size	115 x 100mm
Bolt Hole Spacing	85 x 70mm
Plate Hole	20 x 11mm
Overall Height	166.5mm
Hardness Of Tread	92±5° Shore A
Load Capacity (Dynamic)	400kgs
Load Capacity (Static)	600kgs
Temperature	-20°C to +70°C
Fork Type	Rigid Caster
Stainless	N/A
Electrical Conductivity	N/A
Anti-Static	N/A
Weight	2.49kgs
Standard	ISO22883

Advantages at a glance

Rolling Resistance	● ● ● ● ●
Operating Noise	● ● ● ● ●
Floor Surface Preservation	● ● ● ● ●

Dimensions

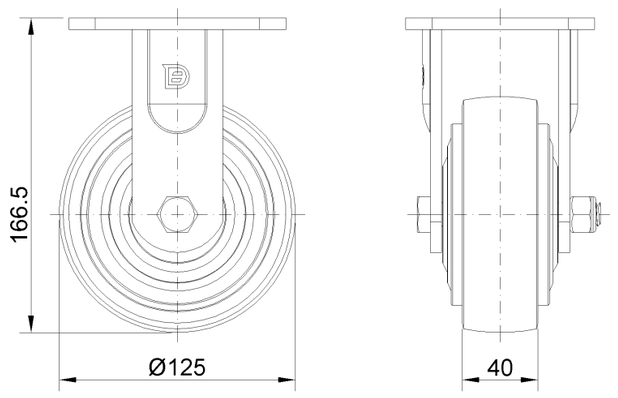

Mounting

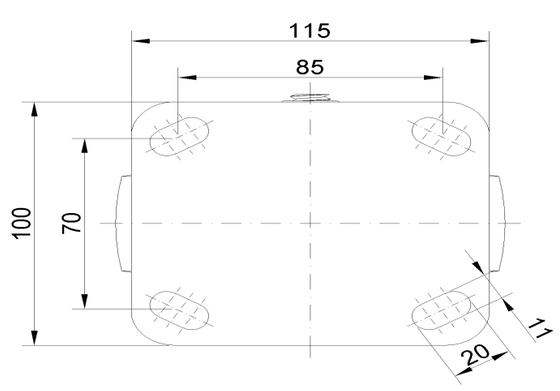

* For any deviation between metric and imperial spec, please refer to the metric spec.

© Copyright 2026 DershengInternational www.dersheng.com