Product Data Sheet

1112-1 2" Wide General Purposes Caster Series

QPU (Brown round) Wheel Diameter × Wheel Width 125 x 40mm

A

KS-11120500531113

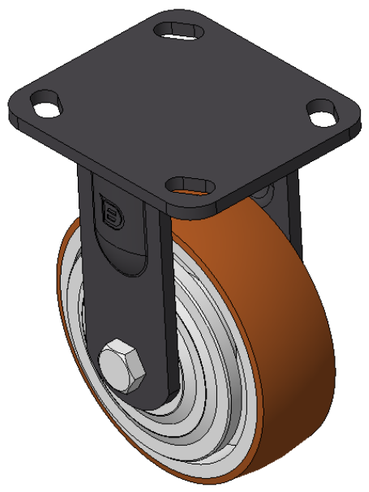

Picture may differ from original product

Rigid Casters, Welded Caster Fork, black paint finish. Base plate Mounting Type device, 85x70mm Bolt Hole Spacing. Cast Iron Wheel Center, High Quality Polyurethane Wheel Tread, Cast Iron brown. Bearings—Ball Bearings, with iron caps.

Wheel Tread: Hhigh-Quality Polyurethane

Wheel Center: Iron core / Cast iron core

Drawings are for reference only and may differ from the product

Technical Data

◉ Imperial ○ Metric

Wheel Diameter	5 "
Wheel Width	1-5/8 "
Wheel Bearing	Wheels With Ball Bearings
Plate Size	4-9/16 " x 4 "
Bolt Hole Spacing	3-3/8 " x 2-3/4 "
Plate Hole	13/16 " x 3/8 "
Overall Height	6-5/8 "
Hardness Of Tread	92±5° Shore A
Load Capacity (Dynamic)	882lbs
Load Capacity (Static)	1323lbs
Temperature	-4°F to +158°F
Fork Type	Rigid Caster
Stainless	N/A
Electrical Conductivity	N/A
Anti-Static	N/A
Weight	5.5lbs
Standard	ISO22883

Advantages at a glance

Rolling Resistance	● ● ● ● ●
Operating Noise	● ● ● ● ●
Floor Surface Preservation	● ● ● ● ●

Dimensions

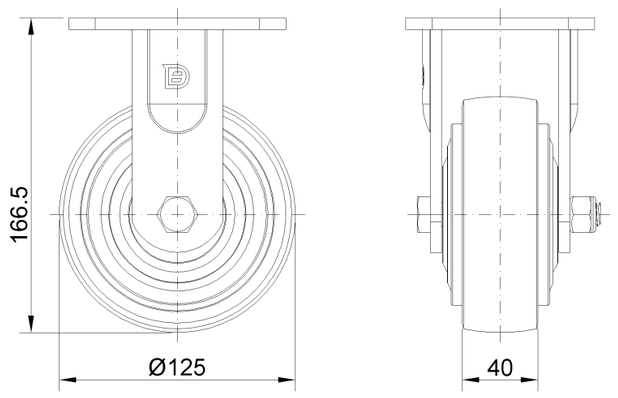

Mounting

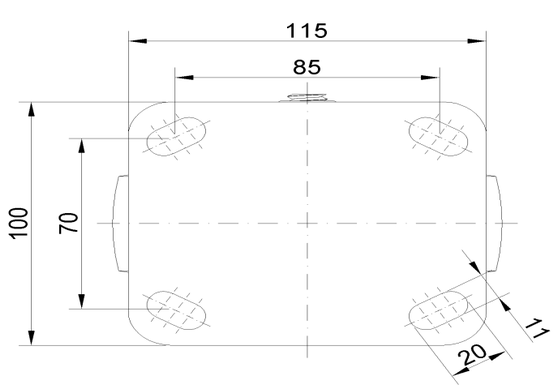

* For any deviation between metric and imperial spec, please refer to the metric spec.

© Copyright 2026 DershengInternational www.dersheng.com