Product Data Sheet

1112-1 2" Wide General Purposes Caster Series

PU (red round) Wheel Diameter x Wheel Width 100 x 45mm

A

KS-11120501334021

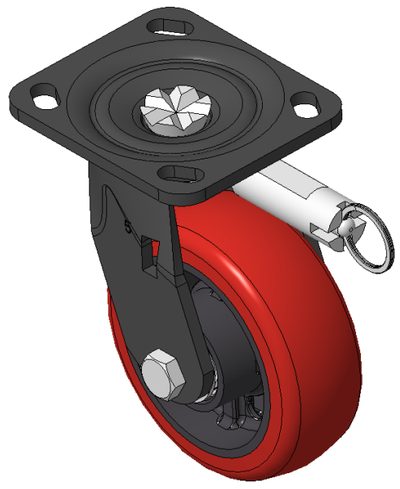

Picture may differ from original product

Directional brake Casters, Welded Caster Fork, black paint finish
Base plate Mounting Type device, 85x70mm Bolt Hole Spacing
Cast Iron Wheel Center, High Quality Polyurethane Wheel Tread, Cast Iron red
Bearings—Ball Bearings

Wheel Tread: Hhigh-Quality Polyurethane

Wheel Center: Iron core / Cast iron core

Drawings are for reference only and may differ from the product

Technical Data

◉ Imperial ○ Metric

Wheel Diameter	4 "
Wheel Width	1-13/16 "
Wheel Bearing	Wheels With Ball Bearings
Plate Size	4-9/16 " x 4 "
Bolt Hole Spacing	3-3/8 " x 2-3/4 "
Plate Hole	13/16 " x 3/8 "
Offset	1 "
Swivel Interference	11-1/2 "
Overall Height	5-5/8 "
Swivel Radius	5-13/16 "
Hardness Of Tread	92±5° Shore A
Load Capacity (Dynamic)	441lbs
Load Capacity (Static)	661lbs
Temperature	-4°F to +158°F
Fork Type	Swivel Caster With Directional Lock
Stainless	N/A
Electrical Conductivity	N/A
Anti-Static	N/A
Weight	6.2lbs
Standard	ISO22883

Advantages at a glance

Rolling Resistance	● ● ● ○ ○
Operating Noise	● ● ● ● ○
Floor Surface Preservation	● ● ● ● ○

Dimensions

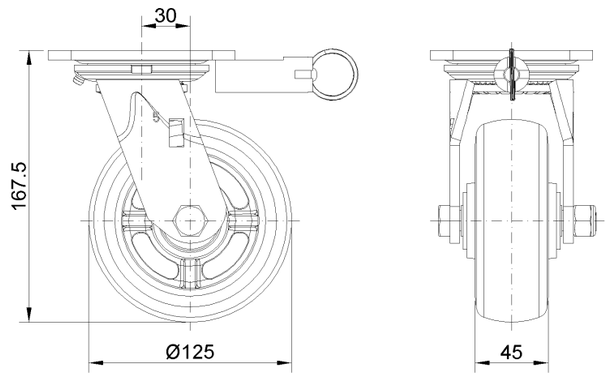

Mounting

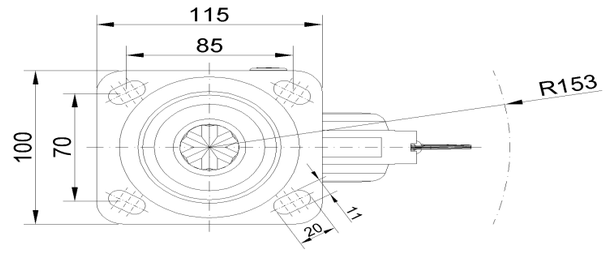

* For any deviation between metric and imperial spec, please refer to the metric spec.

© Copyright 2026 DershengInternational www.dersheng.com