Product Data Sheet

1112-1 2" Wide General Purposes Caster Series

MRC (Transparent) Wheel Diameter × Wheel Width 100 x 32mm

D

KS-11120801072011

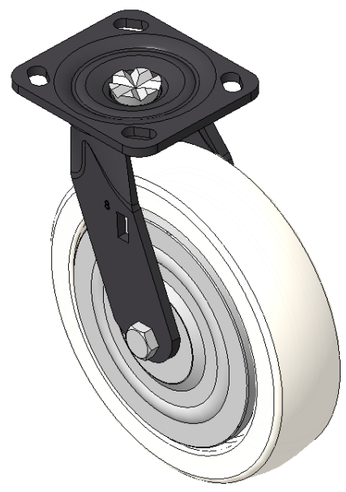

Picture may differ from original product

Moveable Casters, Welded Caster Fork, black paint finish
Base plate Mounting Type, 85x70mm Bolt Hole Spacing
Reinforced Polypropylene (PA6), Cast Iron to natural color
Bearings—Ball Bearings, with metal caps

Wheel surface: Thermoplastic (PA6)
Wheel Center: Thermoplastic (PA6)

Drawings are for reference only and may differ from the product

Technical Data

◉ Imperial ○ Metric

Wheel Diameter	4 "
Wheel Width	1-5/16 "
Wheel Bearing	Wheels With Ball Bearings
Plate Size	4-9/16 " x 4 "
Bolt Hole Spacing	3-3/8 " x 2-3/4 "
Plate Hole	13/16 " x 3/8 "
Offset	1 "
Swivel Interference	6-5/16 "
Overall Height	5-5/8 "
Swivel Radius	3-1/8 "
Hardness Of Tread	75±5° Shore D
Load Capacity (Dynamic)	110lbs
Load Capacity (Static)	165lbs
Temperature	-4°F to +176°F
Fork Type	Swivel Caster
Stainless	N/A
Electrical Conductivity	N/A
Anti-Static	N/A
Weight	3.9lbs
Standard	ISO22883

Advantages at a glance

Rolling Resistance	● ● ● ● ●
Operating Noise	● ● ○ ○ ○
Floor Surface Preservation	● ● ○ ○ ○

Dimensions

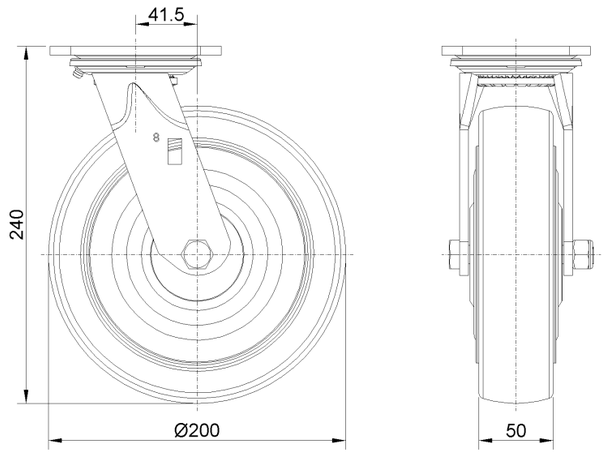

Mounting

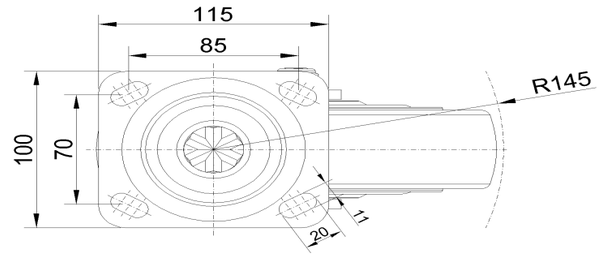

* For any deviation between metric and imperial spec, please refer to the metric spec.

© Copyright 2026 DershengInternational www.dersheng.com