Product Data Sheet

1112-1 2" Wide General Purposes Caster Series

PU (red round) Wheel Diameter x Wheel Width 200 x 50mm

A

KS-11120801332111

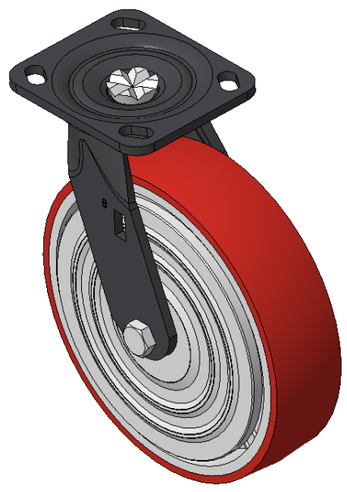

Picture may differ from original product

Moveable Casters, Welded Caster Fork, black paint finish
Base plate Mounting Type device, 85x70mm Bolt Hole Spacing
Cast Iron Wheel Center, High Quality Polyurethane Wheel Tread, Cast Iron red
Bearings—Ball Bearings, with iron caps

Wheel Tread: Hhigh-Quality Polyurethane
Wheel Center: Iron core / Cast iron core

Drawings are for reference only and may differ from the product

Technical Data

◉ Imperial ○ Metric

Wheel Diameter	8 "
Wheel Width	2 "
Wheel Bearing	Wheels With Ball Bearings
Plate Size	4-9/16 " x 4 "
Bolt Hole Spacing	3-3/8 " x 2-3/4 "
Plate Hole	13/16 " x 3/8 "
Offset	1-11/16 "
Swivel Interference	11-1/2 "
Overall Height	9-1/2 "
Swivel Radius	5-13/16 "
Hardness Of Tread	92±5° Shore A
Load Capacity (Dynamic)	1102lbs
Load Capacity (Static)	1653lbs
Temperature	-4°F to +158°F
Fork Type	Swivel Caster
Stainless	N/A
Electrical Conductivity	N/A
Anti-Static	N/A
Weight	10.0lbs
Standard	ISO22883

Advantages at a glance

Rolling Resistance	● ● ● ○ ○
Operating Noise	● ● ● ● ○
Floor Surface Preservation	● ● ● ● ○

Dimensions

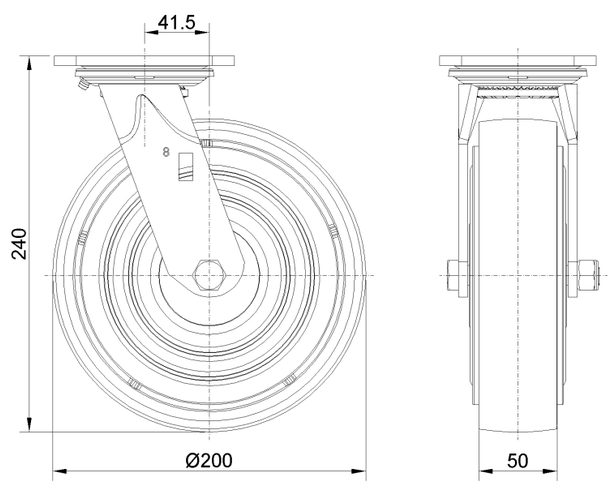

Mounting

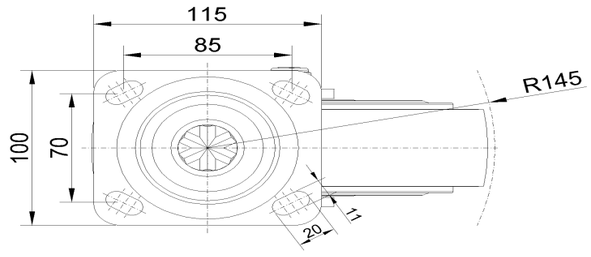

* For any deviation between metric and imperial spec, please refer to the metric spec.

© Copyright 2026 DershengInternational www.dersheng.com