Product Data Sheet

1112-1 2" Wide General Purposes Caster Series

W Resolute (Pearlescent Light Gray) Wheel Diameter × Wheel Width 200 × 50mm

A

KS-11120801454021

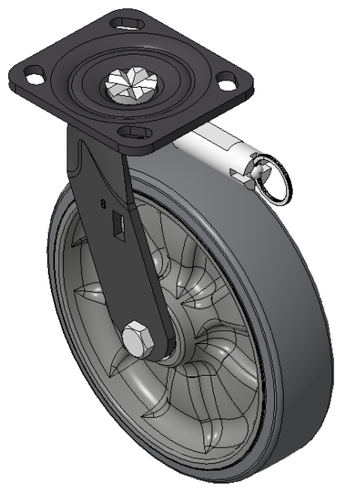

Picture may differ from original product

Directional brake Casters, Welded Caster Fork, black paint finish
Base plate Mounting Type device, 85x70mm Bolt Hole Spacing
Reinforced Polypropylene rubber elastomer (TPR), Cast Iron red
Bearings—Ball Bearings

Wheel tread: Thermoplastic rubber elastomer (TPR)

Wheel Center: High-quality impact-resistant polypropylene

Drawings are for reference only and may differ from the product

Technical Data

◉ Metric ○ Imperial

Wheel Diameter	200mm
Wheel Width	50mm
Wheel Bearing	Wheels With Ball Bearings
Plate Size	115 x 100mm
Bolt Hole Spacing	85 x 70mm
Plate Hole	20 x 11mm
Offset	41.5mm
Swivel Interference	290mm
Overall Height	240mm
Swivel Radius	145mm
Hardness Of Tread	72±5° Shore A
Load Capacity (Dynamic)	430kgs
Load Capacity (Static)	645kgs
Temperature	-20°C to +60°C
Fork Type	Swivel Caster With Directional Lock
Stainless	N/A
Electrical Conductivity	N/A
Anti-Static	N/A
Weight	2.69kgs
Standard	ISO22883

Advantages at a glance

Rolling Resistance	● ● ● ● ●
Operating Noise	● ● ● ● ●
Floor Surface Preservation	● ● ● ● ●

Dimensions

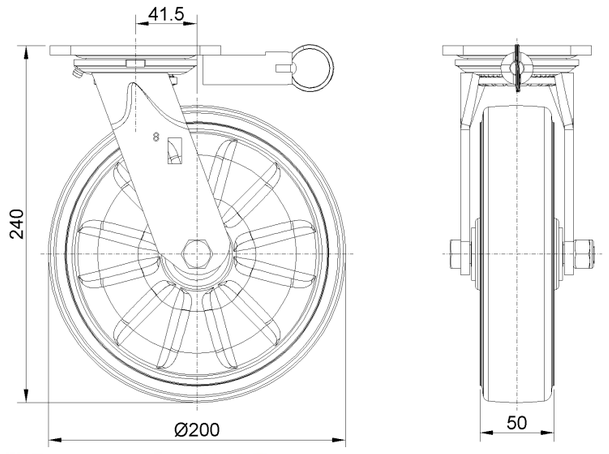

Mounting

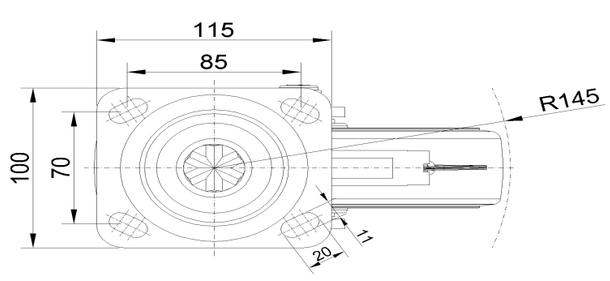

* For any deviation between metric and imperial spec, please refer to the metric spec.

© Copyright 2026 DershengInternational www.dersheng.com