Product Data Sheet

1141 Kingpinless Caster Series

CPD Wheel Diameter × Wheel Width 100 x 32mm

EAN

KS-11410400294023

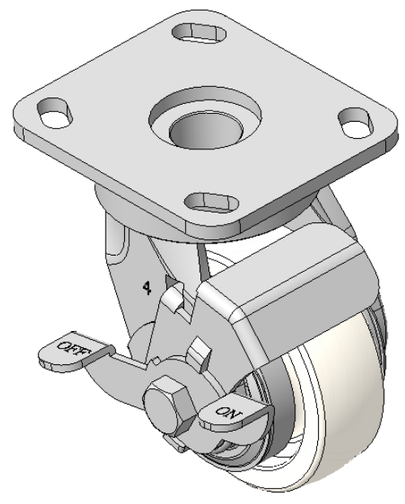

Picture may differ from original product

Casters with Side Brakes and With locking system, Welded Caster Fork
Zine-Plated, Mounting Type - Top Plate, 85x70 Bolt Hole Spacing
Polypropylene Wheel Center, natural Wheel Tread
Bearings—Ball Bearings with special Anti-thread wheel cover

Wheel surface: PP polypropylene
Wheel Center: PP polypropylene

Drawings are for reference only and may differ from the product

Technical Data

◉ Metric ○ Imperial

Wheel Diameter	100mm
Wheel Width	32mm
Wheel Bearing	Wheels With Ball Bearings
Plate Size	115 x 100mm
Bolt Hole Spacing	85 x 70mm
Plate Hole	20 x 11mm
Offset	25.7mm
Swivel Interference	204mm
Overall Height	141.6mm
Swivel Radius	102mm
Hardness Of Tread	72±5° Shore D
Load Capacity (Dynamic)	200kgs
Load Capacity (Static)	300kgs
Temperature	-12°C to +60°C
Fork Type	Swivel Caster With Front Brake
Stainless	N/A
Electrical Conductivity	N/A
Anti-Static	N/A
Weight	1.96kgs
Standard	ISO22883

Advantages at a glance

Rolling Resistance	● ● ● ● ●
Operating Noise	● ● ● ○ ○
Floor Surface Preservation	● ● ● ○ ○

Dimensions

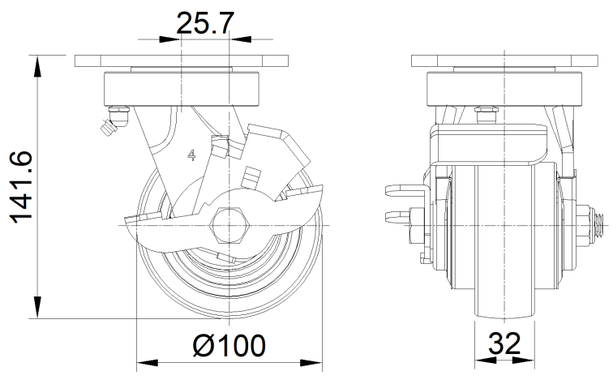

Mounting

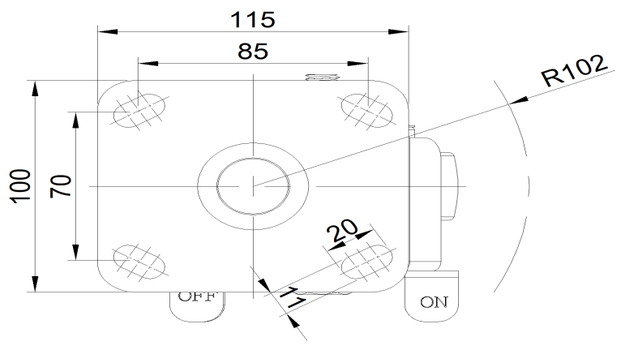

* For any deviation between metric and imperial spec, please refer to the metric spec.

© Copyright 2025 DershengInternational www.dersheng.com