1141 Kingpinless Caster Series

WHDR Wheel (Middle Tube Pearlescent Light Gray) Wheel Diameter × Wheel Width
100×50mm

EAN

KS-11410400502723

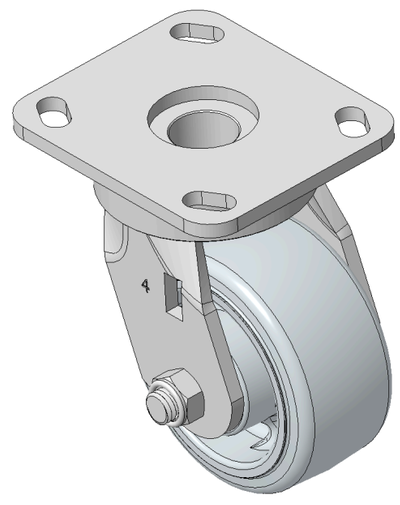

Picture may differ from original product

Drawings are for reference only and may differ from the product

Technical Data

◉ Imperial ○ Metric

Wheel Diameter	4 "
Wheel Width	2 "
Wheel Bearing	Wheels With Ball Bearings
Plate Size	4-9/16 " x 4 "
Bolt Hole Spacing	3-3/8 " x 2-3/4 "
Plate Hole	13/16 " x 3/8 "
Offset	1-1/16 "
Swivel Interference	6-1/8 "
Overall Height	5-5/8 "
Swivel Radius	3-1/16 "
Hardness Of Tread	95±5° Shore A
Load Capacity (Dynamic)	595lbs
Load Capacity (Static)	893lbs
Temperature	-4°F to +140°F
Fork Type	Swivel Caster
Stainless	N/A
Electrical Conductivity	N/A
Anti-Static	N/A
Weight	4.1lbs
Standard	ISO22883

Advantages at a glance

Rolling Resistance	●●●●●
Operating Noise	●●●○○
Floor Surface Preservation	●●●○○

Dimensions

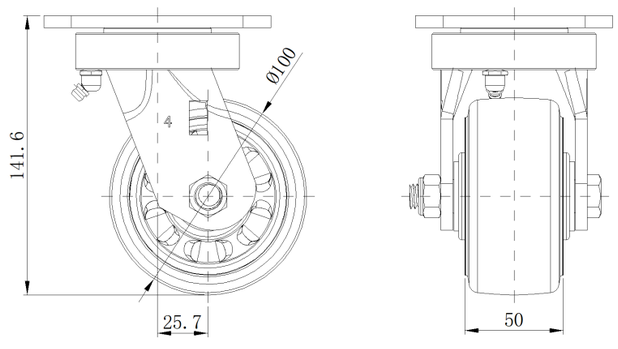

Mounting

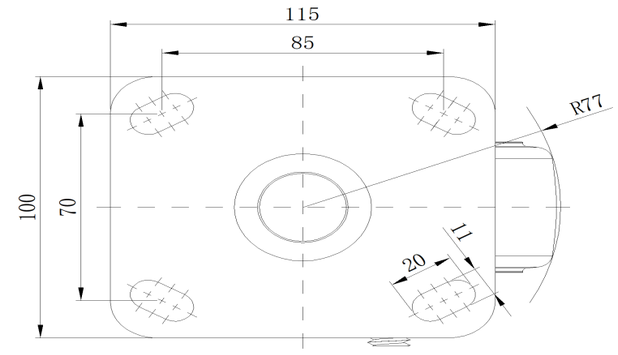

* For any deviation between metric and imperial spec, please refer to the metric spec.

© Copyright 2026 DershengInternational www.dersheng.com