1141 Kingpinless Caster Series

QPU (brown round) Wheel Diameter × Wheel Width 100 x 34mm

EAN

KS-11410400533123

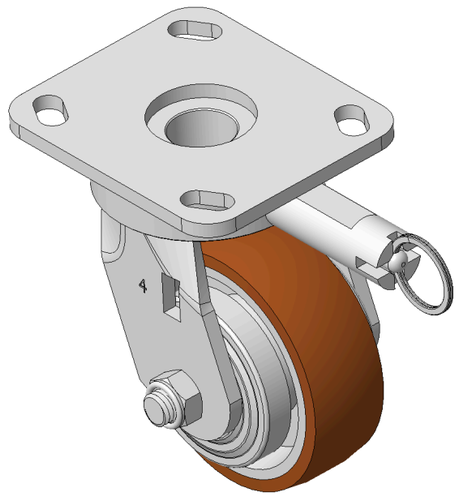

Picture may differ from original product

Drawings are for reference only and may differ from the product

Technical Data

◉ Imperial ○ Metric

Wheel Diameter	4 "
Wheel Width	1-3/8 "
Wheel Bearing	Wheels With Ball Bearings
Plate Size	4-9/16 " x 4 "
Bolt Hole Spacing	3-3/8 " x 2-3/4 "
Plate Hole	13/16 " x 3/8 "
Offset	1-1/16 "
Swivel Interference	10-5/8 "
Overall Height	5-5/8 "
Swivel Radius	5-3/8 "
Hardness Of Tread	92±5° Shore A
Load Capacity (Dynamic)	739lbs
Load Capacity (Static)	1108lbs
Temperature	-4°F to +158°F
Fork Type	Swivel Caster With Directional Lock
Stainless	N/A
Electrical Conductivity	N/A
Anti-Static	N/A
Weight	5.6lbs
Standard	ISO22883

Advantages at a glance

Rolling Resistance	●●●●●
Operating Noise	●●●●●
Floor Surface Preservation	●●●●●

Dimensions

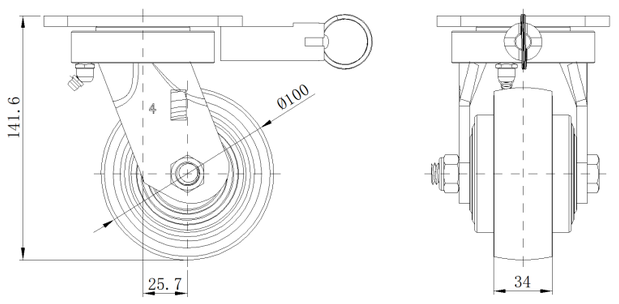

Mounting

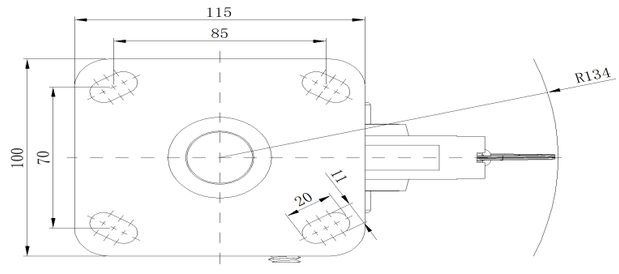

* For any deviation between metric and imperial spec, please refer to the metric spec.

© Copyright 2026 DershengInternational www.dersheng.com