1141 Kingpinless Caster Series

CPD Wheel Diameter x Wheel Width 125 x 40mm

EAN

KS-11410500291013

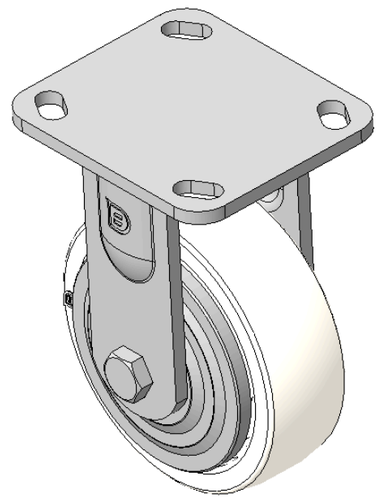

Picture may differ from original product

Drawings are for reference only and may differ from the product

Technical Data

◉ Metric ○ Imperial

Wheel Diameter	125mm
Wheel Width	40mm
Wheel Bearing	Wheels With Ball Bearings
Plate Size	115 x 100mm
Bolt Hole Spacing	85 x 70mm
Plate Hole	20 x 11mm
Overall Height	166.5mm
Hardness Of Tread	72±5° Shore D
Load Capacity (Dynamic)	250kgs
Load Capacity (Static)	375kgs
Temperature	-12°C to +60°C
Fork Type	Rigid Caster
Stainless	N/A
Electrical Conductivity	N/A
Anti-Static	N/A
Weight	1.59kgs
Standard	ISO22883

Advantages at a glance

Rolling Resistance	●●●●●
Operating Noise	●●●○○
Floor Surface Preservation	●●●○○

Dimensions

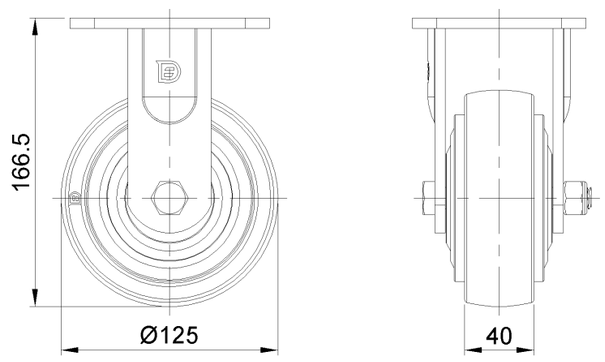

Mounting

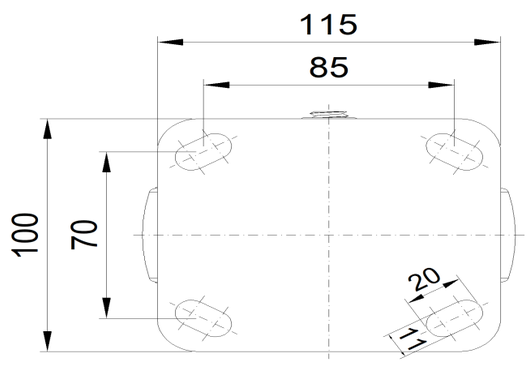

* For any deviation between metric and imperial spec, please refer to the metric spec.

© Copyright 2026 DershengInternational www.dersheng.com