1141 Kingpinless Caster Series

PU (red round) Wheel Diameter x Wheel Width 125 x 45mm

EAN

KS-11410500334213

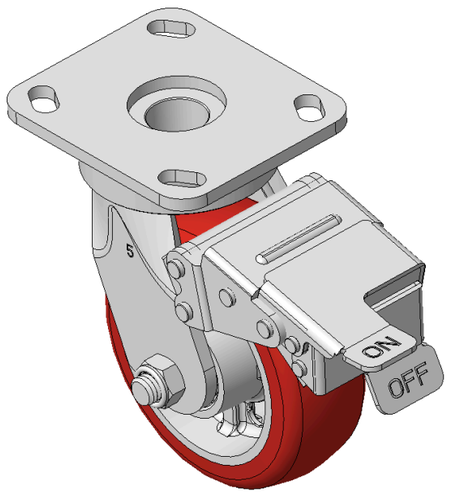

Drawings are for reference only and may differ from the product

Picture may differ from original product

Technical Data

◉ Imperial ○ Metric

Wheel Diameter	5 "
Wheel Width	1-13/16 "
Wheel Bearing	Wheels With Ball Bearings
Plate Size	4-9/16 " x 4 "
Bolt Hole Spacing	3-3/8 " x 2-3/4 "
Plate Hole	13/16 " x 3/8 "
Offset	1-3/16 "
Swivel Interference	310
Overall Height	6-5/8 "
Swivel Radius	6-1/8 "
Hardness Of Tread	93±5° Shore A
Load Capacity (Dynamic)	794lbs
Load Capacity (Static)	1190lbs
Temperature	-4°F to +158°F
Fork Type	Swivel Caster With Front Brake
Stainless	N/A
Electrical Conductivity	N/A
Anti-Static	N/A
Weight	8.0lbs
Standard	ISO22883

Advantages at a glance

Rolling Resistance	●●●○○
Operating Noise	●●●●○
Floor Surface Preservation	●●●●○

Dimensions

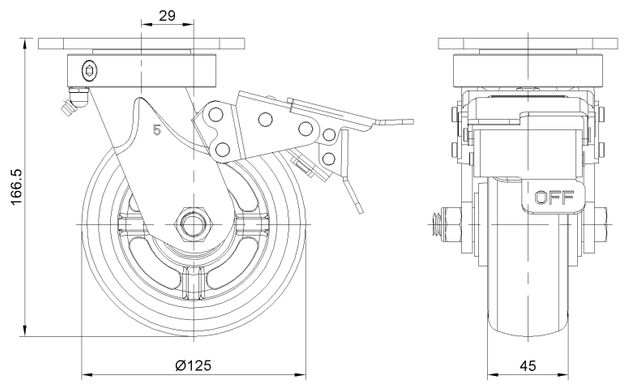

Mounting

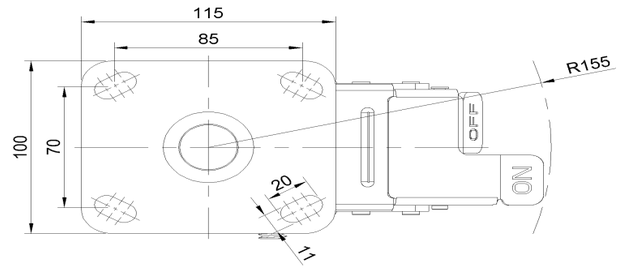

* For any deviation between metric and imperial spec, please refer to the metric spec.

© Copyright 2026 DershengInternational www.dersheng.com