Product Data Sheet

1141 Kingpinless Caster Series

WHDR (pearl light gray) Wheel Diameter x Wheel Width 125 x 50mm

EAN

KS-11410500503723

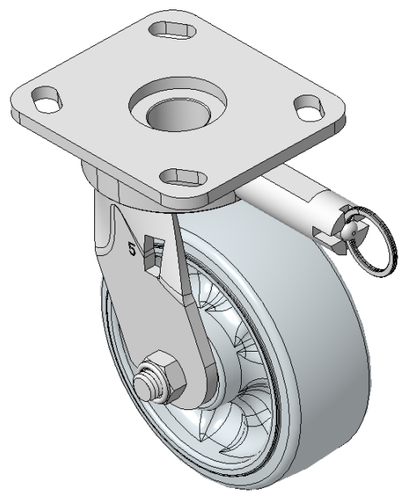

Picture may differ from original product

Casters with directional brake and With locking system, Welded Caster Fork
Zine-Plated, Mounting Type - Top Plate, 85x70 Bolt Hole Spacing
Cast Iron Wheel Center, High Quality Polyurethane Wheel Tread, Cast Iron pearlescent light gray
Bearings—Ball Bearings

Wheel tread: Made of high-quality polyurethane

Wheel Center: iron core/cast iron core

Drawings are for reference only and may differ from the product

Technical Data

◉ Imperial ○ Metric

Wheel Diameter	5 "
Wheel Width	2 "
Wheel Bearing	Wheels With Ball Bearings
Plate Size	4-9/16 " x 4 "
Bolt Hole Spacing	3-3/8 " x 2-3/4 "
Plate Hole	13/16 " x 3/8 "
Offset	1-3/16 "
Swivel Interference	11-7/16 "
Overall Height	6-5/8 "
Swivel Radius	5-11/16 "
Hardness Of Tread	95±5° Shore A
Load Capacity (Dynamic)	750lbs
Load Capacity (Static)	1124lbs
Temperature	-4°F to +140°F
Fork Type	Swivel Caster With Directional Lock
Stainless	N/A
Electrical Conductivity	N/A
Anti-Static	N/A
Weight	5.1lbs
Standard	ISO22883

Advantages at a glance

Rolling Resistance	● ● ● ● ●
Operating Noise	● ● ● ○ ○
Floor Surface Preservation	● ● ● ○ ○

Dimensions

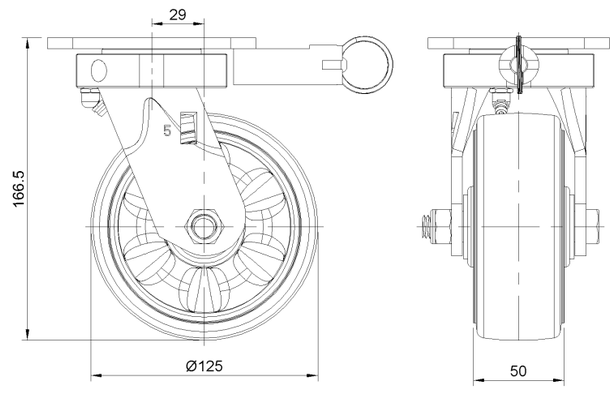

Mounting

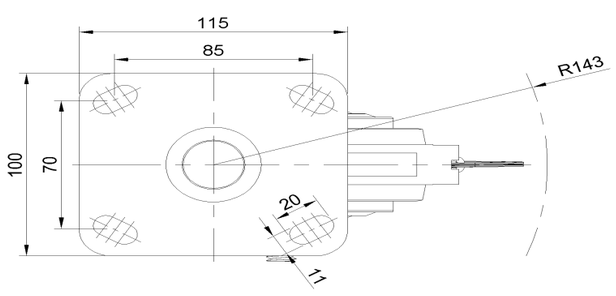

* For any deviation between metric and imperial spec, please refer to the metric spec.

© Copyright 2025 DershengInternational www.dersheng.com