1142 Kingpinless Caster (B Type) Series

MRC (Transparent) Wheel Diameter × Wheel Width 100 x 32mm

EAN

KS-11420400074021

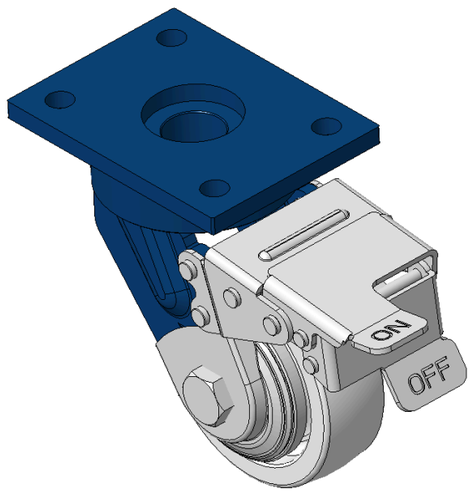

Picture may differ from original product

Drawings are for reference only and may differ from the product

Technical Data

◉ Imperial ○ Metric

Wheel Diameter	4 "
Wheel Width	6-11/32 "
Wheel Bearing	Wheels With Ball Bearings
Plate Size	4-13/16 " x 3-9/16 "
Bolt Hole Spacing	3-9/16 " x 2-3/8 "
Plate Hole	1/2 "
Offset	1-5/8 "
Swivel Interference	11-3/4 "
Overall Height	5-7/8 "
Swivel Radius	5-15/16 "
Hardness Of Tread	75±5° Shore D
Load Capacity (Dynamic)	551lbs
Load Capacity (Static)	827lbs
Temperature	-4°F to +176°F
Fork Type	Swivel Caster With Front Brake
Stainless	N/A
Electrical Conductivity	N/A
Anti-Static	N/A
Weight	6.4lbs
Standard	ISO22883

Advantages at a glance

Rolling Resistance	●●●●●
Operating Noise	●●○○○
Floor Surface Preservation	●●○○○

Dimensions

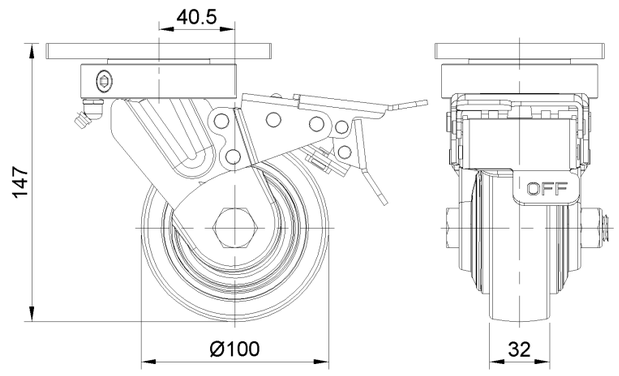

Mounting

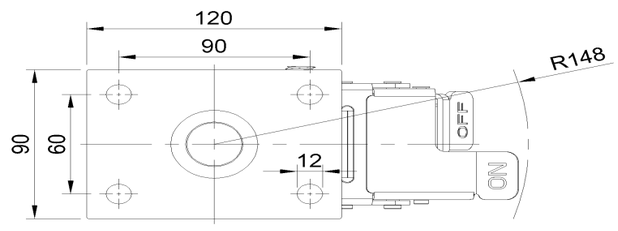

* For any deviation between metric and imperial spec, please refer to the metric spec.

© Copyright 2026 DershengInternational www.dersheng.com