1142 Kingpinless Caster (B Type) Series

CPD Wheel Diameter × Wheel Width 100 x 32mm

EAN

KS-11420400294021

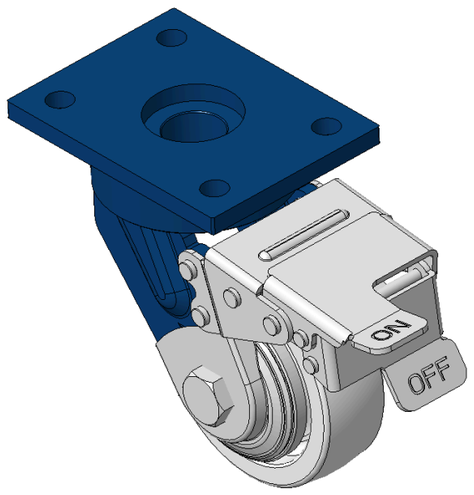

Picture may differ from original product

Drawings are for reference only and may differ from the product

Technical Data

◉ Metric ○ Imperial

Wheel Diameter	100mm
Wheel Width	32mm
Wheel Bearing	Wheels With Ball Bearings
Plate Size	120 x 90mm
Bolt Hole Spacing	90 x 60mm
Plate Hole	12mm
Offset	40.5mm
Swivel Interference	296mm
Overall Height	147mm
Swivel Radius	148mm
Hardness Of Tread	72±5° Shore D
Load Capacity (Dynamic)	200kgs
Load Capacity (Static)	300kgs
Temperature	-12°C to +60°C
Fork Type	Swivel Caster With Front Brake
Stainless	N/A
Electrical Conductivity	N/A
Anti-Static	N/A
Weight	2.93kgs
Standard	ISO22883

Advantages at a glance

Rolling Resistance	●●●●●
Operating Noise	●●●○○
Floor Surface Preservation	●●●○○

Dimensions

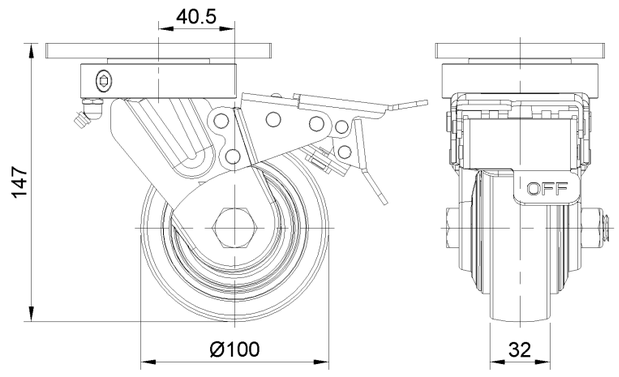

Mounting

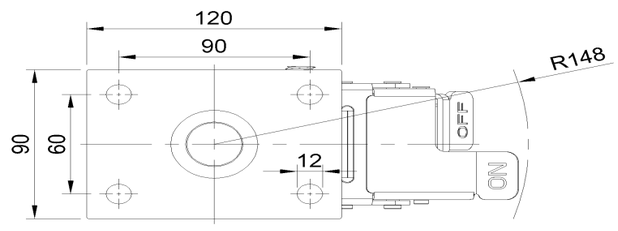

* For any deviation between metric and imperial spec, please refer to the metric spec.

© Copyright 2026 DershengInternational www.dersheng.com